National Semiconductor

August 1998

100321
Low Power 9-Bit Inverter

General Description

The 100321 is a monolithic 9-bit inverter. The device contains nine inverting buffer gates with single input and output. All inputs have 50 kΩ pull-down resistors.

Features

- 30% power reduction of the 100121
- 2000V ESD protection
- Pin/function compatible with 100121
- Voltage compensated operating range = −4.2V to −5.7V
- Available to MIL-STD-883

Logic Symbol

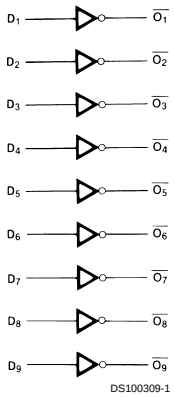

Pin Names	Description
D_1–D_9	Data Inputs
$\overline{O}_1$–$\overline{O}_9$	Data Outputs

Connection Diagrams

24-Pin DIP

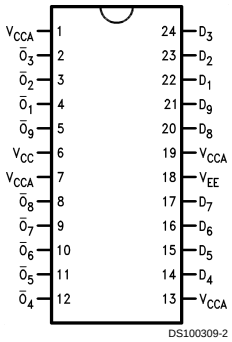

24-Pin Quad Cerpak

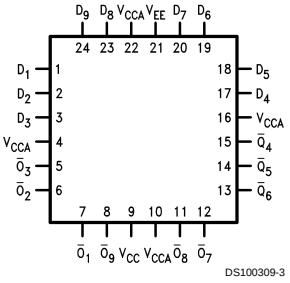

© 1998 National Semiconductor Corporation

Absolute Maximum Ratings (Note 1)

If Military/Aerospace specified devices are required, please contact the National Semiconductor Sales Office/ Distributors for availability and specifications.

Above which the useful life may be impaired	
Storage Temperature (T_{STG})	−65˚C to +150˚C
Maximum Junction Temperature (T_J)	
Ceramic	+175˚C
Plastic	+150˚C
V_{EE} Pin Potential to Ground Pin	−7.0V to +0.5V
Input Voltage (DC)	V_{EE} to +0.5V
Output Current (DC Output HIGH)	−50 mA
ESD (Note 2)	≥2000V

Recommended Operating Conditions

Case Temperature (T_C)	
Military	−55˚C to +125˚C
Supply Voltage (V_{EE})	−5.7V to −4.2V

Note 1: Absolute maximum ratings are those values beyond which the device may be damaged or have its useful life impaired. Functonal operation under these conditions is not implied.

Note 2: ESD testing conforms to MIL-STD-883, Method 3015.

Military Version

DC Electrical Characteristics

V_{EE} = −4.2V to −5.7V, V_{CC} = V_{CCA} = GND, T_C = −55˚C to +125˚C

Symbol	Parameter	Min	Max	Units	T_C	Conditions		Notes
V_{OH}	Output HIGH Voltage	−1025	−870	mV	O˚C to +125˚C	V_{IN} = V_{IH} (Max) or V_{IL} (Min)	Loading with 50Ω to −2.0V	(Notes 3, 4, 5)
		−1085	−870	mV	−55˚C			
V_{OL}	Output LOW Voltage	−1830	−1620	mV	0˚C to +125˚C			
		−1830	−1555	mV	−55˚C			
V_{OHC}	Output HIGH Voltage	−1035		mV	0˚C to +125˚C	V_{IN} = V_{IH} (Min) or V_{IL} (Max)	Loading with 50Ω to −2.0V	(Notes 3, 4, 5)
		−1085		mV	−55˚C			
V_{OLC}	Output LOW Voltage		−1610	mV	0˚C to +125˚C			
			−1555	mV	−55˚C			
V_{IH}	Input HIGH Voltage	−1165	−870	mV	−55˚C to +125˚C	Guaranteed HIGH Signal for All Inputs		(Notes 3, 4, 5, 6)
V_{IL}	Input LOW Voltage	−1830	−1475	mV	−55˚C to +125˚C	Guaranteed LOW Signal for All Inputs		(Notes 3, 4, 5, 6)
I_{IL}	Input LOW Current	0.50		µA	−55˚C to +125˚C	V_{EE} = −4.2V V_{IN} = V_{IL} (Min)		(Notes 3, 4, 5)
I_{IH}	Input HIGH Current		240	µA	0˚C to +125˚C	V_{EE} = −5.7V V_{IN} = V_{IH} (Max)		(Notes 3, 4, 5)
			340	µA	−55˚C			
I_{EE}	Power Supply Current	−70	−25	mA	−55˚C to +125˚C	Inputs Open		(Notes 3, 4, 5)

Note 3: F100K 300 Series cold temperature testing is performed by temperature soaking (to guarantee junction temperature equals −55˚C), then testing immediately without allowing for the junction temperature to stabilize due to heat dissipation after power-up. This provides "cold start" specs which can be considered a worst case condition at cold temperatures.

Note 4: Screen tested 100% on each device at −55˚C, +25˚C, and +125˚C, Subgroups 1, 2, 3, 7, and 8.

Note 5: Sample tested (Method 5005, Table I) on each manufactured lot at −55˚C, +25˚C and +125˚C, Subgroups A1, 2, 3, 7, and 8.

Note 6: Guaranteed by applying specified input condition and testing V_{OH}/V_{OL}.

AC Electrical Characteristics

V_{EE} = −4.2V to −5.7V, V_{CC} = V_{CCA} = GND

Symbol	Parameter	T_C = −55˚C		T_C = +25˚C		T_C = +125˚C		Units	Conditions	Notes
		Min	Max	Min	Max	Min	Max			
t_{PLH} t_{PHL}	Propagation Delay Data to Output	0.30	1.80	0.40	1.60	0.40	1.80	ns	*Figures 1, 2*	(Notes 7, 8, 9, 11)
t_{TLH} t_{THL}	Transition Time 20% to 80%, 80% to 20%	0.30	1.20	0.30	1.20	0.30	1.20	ns		(Note 10)

Note 7: F100K 300 Series cold temperature testing is performed by temperature soaking (to guarantee junction temperature equals −55˚C), then testing immediately after power-up. This provides "cold start" specs which can be considered a worst case condition at cold temperatures.

Note 8: Screen tested 100% on each device at +25˚C temperature only, Subgroup A9.

Note 9: Sample tested (Method 5005, Table I) on each mfg. lot at +25˚C, Subgroup A9, and at +125˚C and −55˚C temperatures, Subgroups A10 and A11.

Note 10: Not tested at +25˚C, +125˚C, and −55˚C temperature (design characterization data).

Note 11: The propagation delay specified is for single output switching. Delays may vary up to 200 ps with multiple outputs switching.

Test Circuitry

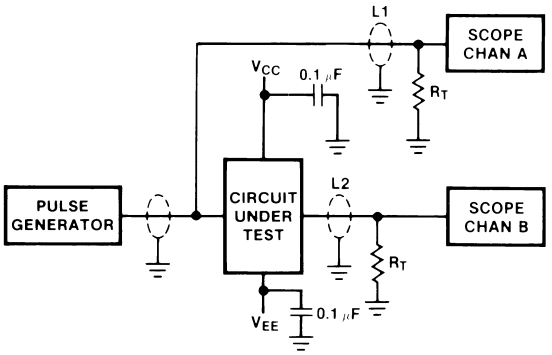

DS100309-5

Notes:
V_{CC}, V_{CCA} = +2V, V_{EE} = −2.5V
L1 and L2 = equal length 50Ω impedance lines
R_T = 50Ω terminator internal to scope
Decoupling 0.1 µF from GND to V_{CC} and V_{EE}
All unused outputs are loaded with 50Ω to GND
C_L = Fixture and stray capacitance ≤ 3 pF

FIGURE 1. AC Test Circuit

Switching Waveforms

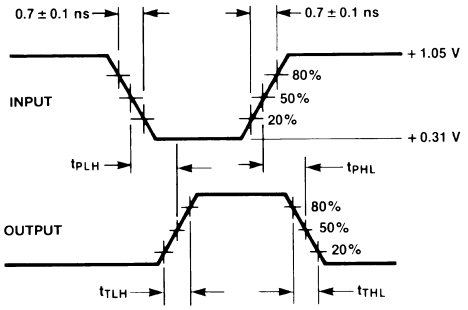

DS100309-6

FIGURE 2. Propagation Delay and Transition Times

Physical Dimensions inches (millimeters) unless otherwise noted

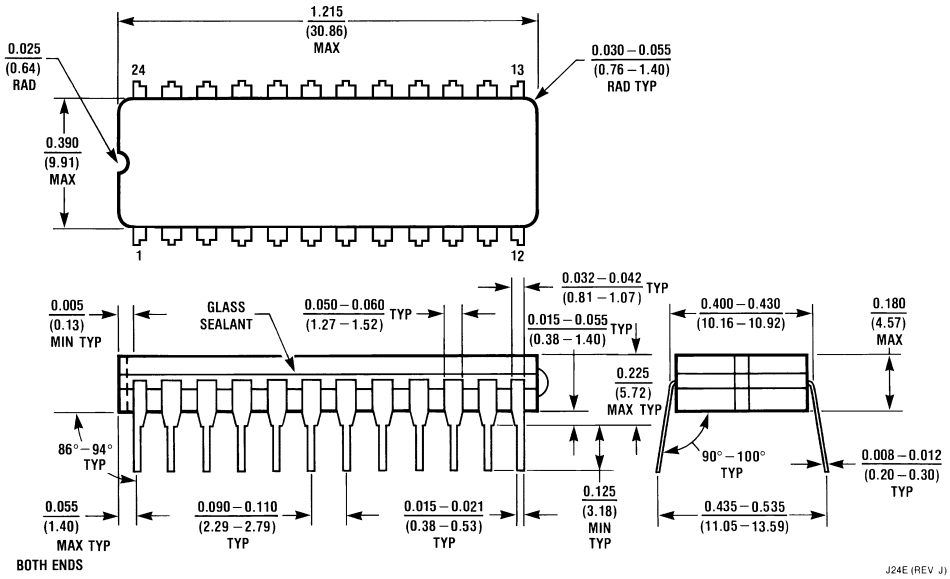

24-Lead Ceramic Dual-In-Line Package (D)
NS Package Number J24E

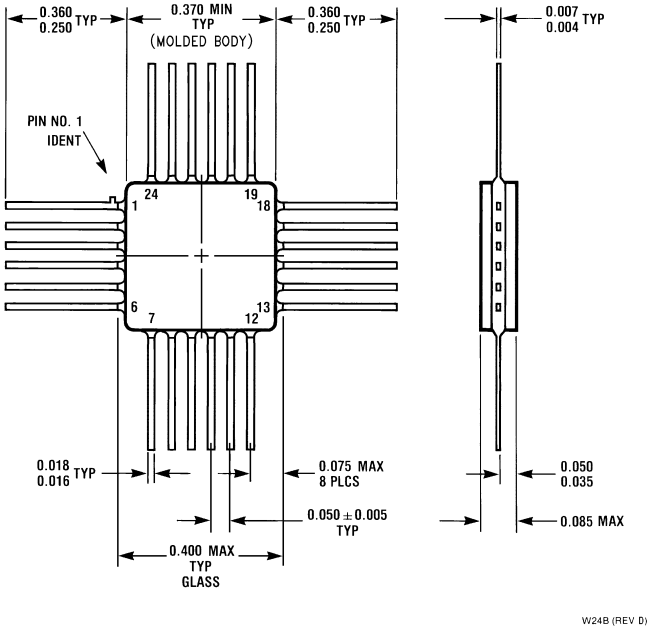

24-Lead Quad Cerpak (F)
NS Package Number W24B

LIFE SUPPORT POLICY

NATIONAL'S PRODUCTS ARE NOT AUTHORIZED FOR USE AS CRITICAL COMPONENTS IN LIFE SUPPORT DEVICES OR SYSTEMS WITHOUT THE EXPRESS WRITTEN APPROVAL OF THE PRESIDENT OF NATIONAL SEMICONDUCTOR CORPORATION. As used herein:

1. Life support devices or systems are devices or systems which, (a) are intended for surgical implant into the body, or (b) support or sustain life, and whose failure to perform when properly used in accordance with instructions for use provided in the labeling, can be reasonably expected to result in a significant injury to the user.
2. A critical component in any component of a life support device or system whose failure to perform can be reasonably expected to cause the failure of the life support device or system, or to affect its safety or effectiveness.

National Semiconductor Corporation
Americas
Tel: 1-800-272-9959
Fax: 1-800-737-7018
Email: support@nsc.com

www.national.com

National Semiconductor Europe
Fax: +49 (0) 1 80-530 85 86
Email: europe.support@nsc.com
Deutsch Tel: +49 (0) 1 80-530 85 85
English Tel: +49 (0) 1 80-532 78 32
Français Tel: +49 (0) 1 80-532 93 58
Italiano Tel: +49 (0) 1 80-534 16 80

National Semiconductor Asia Pacific Customer Response Group
Tel: 65-2544466
Fax: 65-2504466
Email: sea.support@nsc.com

National Semiconductor Japan Ltd.
Tel: 81-3-5620-6175
Fax: 81-3-5620-6179

National does not assume any responsibility for use of any circuitry described, no circuit patent licenses are implied and National reserves the right at any time without notice to change said circuitry and specifications.