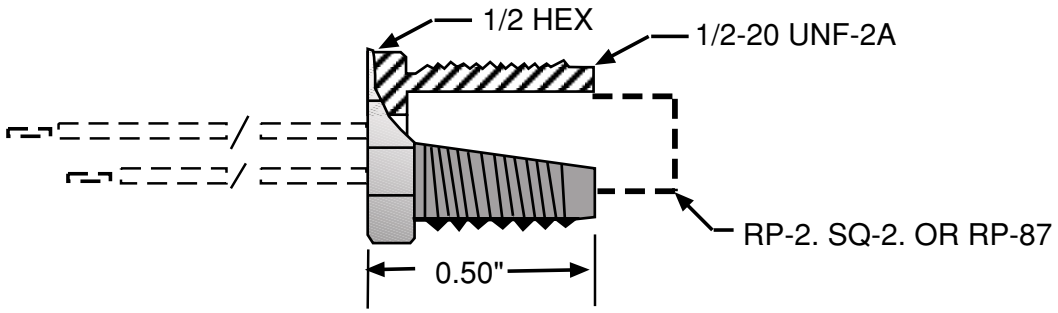

P/N 188- 4167

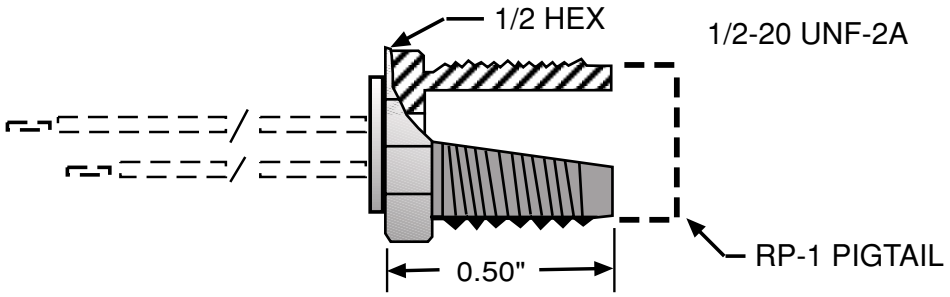

P/N 167- 3123

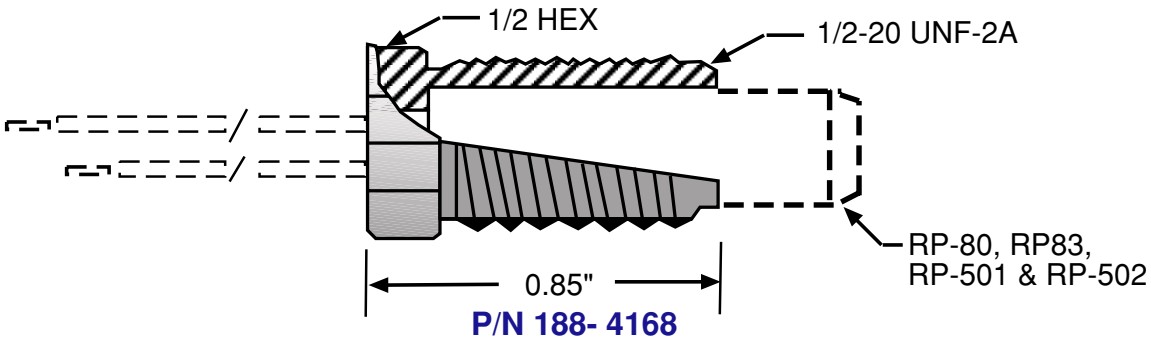

P/N 188- 4168

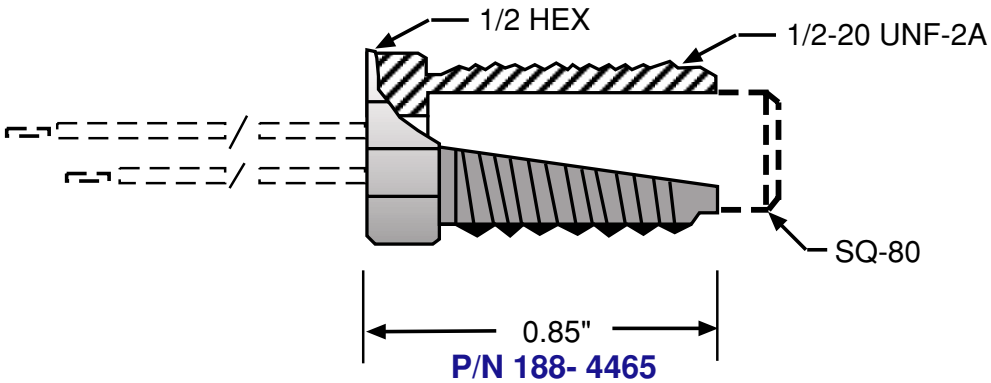

P/N 188- 4465