TELEDYNE
PARADISE DATACOM
A Teledyne Technologies Company

Redundant System Controllers
RCP2-1100/RCP2-1200
FPRC-1100/FPRC-1200
Operations Manual

RCP2-1100, 1:1 Redundant System Controller

RCP2-1200, 1:2 Redundant System Controller

FPRC-1100, 1:1 Phase Combined System Controller

FPRC-1200, 1:2 Phase Combined System Controller

Teledyne Paradise Datacom
328 Innovation Blvd., Suite 100
State College, PA 16803 USA
Email: sales@paradisedata.com

Phone: (814) 238-3450
Fax: (814) 238-3829
Web: www.paradisedata.com

209351 REV G ECO 18629 07/23/2018

Teledyne Paradise Datacom, a division of Teledyne Wireless LLC, is a single source for high power solid state amplifiers (SSPAs), Low Noise Amplifiers (LNAs), Block Up Converters (BUCs), and Modem products. Operating out of two primary locations, Witham, United Kingdom, and State College, PA, USA, Teledyne Paradise Datacom has a more than 20 year history of providing innovative solutions to enable satellite uplinks, battlefield communications, and cellular backhaul.

Teledyne Paradise Datacom	Teledyne Paradise Datacom Ltd.
328 Innovation Blvd., Suite 100	2&3 The Matchyns, London Road, Rivenhall End
State College, PA 16803 USA	Witham, Essex CM8 3HA England
(814) 238-3450 (switchboard)	+44 (0) 1376 515636
(814) 238-3829 (fax)	+44 (0) 1376 533764 (fax)

Information in this document is subject to change without notice. The latest revision of this document may be downloaded from the company web site: http://www.paradisedata.com.

Use and Disclosure of Data

The items described herein are controlled by the U.S. Government and authorized for export only to the country of ultimate destination for use by the ultimate consignee or end-user(s) herein identified. They may not be resold, transferred, or otherwise disposed of, to any other country or to any person other than the authorized ultimate consignee or end-user(s), either in their original form or after being incorporated into other items, without first obtaining approval from the U.S. government or as otherwise authorized by U.S. law and regulations.

Proprietary and Confidential

The information contained in this document is the sole property of Teledyne Paradise Datacom. Any reproduction in part or as a whole without the written permission of Teledyne Paradise Datacom is prohibited.

All other company names and product names in this document are property of the respective companies.

© 2013-2018 Teledyne Paradise Datacom LLC
Printed in the USA

Table of Contents

Table of Contents **3**
List of Figures **8**
List of Tables **10**

Section 1: General Information **11**
1.0 Introduction 11
1.1 Description 11
1.2 Equipment Supplied 11
1.3 Specifications 12
1.3.1 Outline Drawings 12
1.4 Safety Considerations 13
1.4.1 High Voltage Hazards 13
1.4.2 High Current Hazards 13
1.4.3 Electrical Discharge Hazards 14

Section 2: Description **15**
2.0 Introduction 15
2.1 Inspection 15
2.2 Mounting 15
2.3 Storage and Shipment 15
2.4 Cable Connections 15
2.5.1 Control Cable Connector (J3) - MS3112E16-23S 16
2.5.2 Serial Port, Main (J4) - DB9 (F) 16
2.5.3 Serial Port, Local (J5) - DB9 (M) 17
2.5.4 Service Port (J6) - Mini USB 17
2.5.5 Parallel I/O Connector (J7) - DB37 (F) 17
2.5.6 External Alarm Port (J8) - DB9 (F) [IO Board Version 001] 19
2.5.7 Ethernet Port (J9) - RJ45 (F) 19
2.5 Prime Power Connection (J1, J2) 20
2.6 Removable Power Supply Modules 20
2.6.1 24V Power Supply Module 20
2.6.2 24V Power Supply Module, High Power option 21
2.6.3 48V Power Supply Module 22

Section 3: Front Panel Overview & Operation **23**
3.0 Introduction 23
3.0.1 System Identification 23
3.0.2 Fault Indicators 23
3.0.3 Signal Path Mimic Display 23
3.0.4 Amplifier Select Keys 24
3.0.5 Vacuum Fluorescent Display 24
3.0.6 Main Menu Key 24
3.0.7 Local / Remote Key 25
3.0.8 Auto / Manual Key 25
3.0.9 Display Navigation Keys 25
3.0.10 Enter Key 25
3.1 Local / Remote control 26
3.2 Methods of switching 26
3.2.1 Manual Mode 26

3.2.2 Auto Mode 26
3.2.3 Physically Rotating Transfer Switch 26
3.3 Local (Front Panel) Menu Structure 27
3.3.1 Sys Info 28
3.3.1.1 Sys Info - Page 1 29
3.3.1.2 Sys Info - Page 2 29
3.3.1.3 Sys Info - Page 3 30
3.3.1.4 Sys Info - Page 4 31
3.3.1.5 Sys Info - Page 5 31
3.3.1.6 Sys Info - Page 6 32
3.3.1.7 Sys Info - Page 7 32
3.3.1.8 SSPA Subsystem Information - Pages 1-5 33
3.3.1.9 IP Info - Page 1 33
3.3.1.10 IP Info - Page 2 33
3.3.1.11 IP Info - Page 3 34
3.3.1.12 IP Info - Page 4 34
3.3.1.13 Firmware Info - Page 1 (v. 6.00) 34
3.3.1.14 Firmware Info - Page 2 (v. 6.00) 34
3.3.1.15 Device Run Time Page (v. 6.00) 34
3.3.1.16 RCP2 Local Time Info Page (v. 6.00) 35
3.3.2 Serial Communication Parameters 36
3.3.2.1 Protocol 36
3.3.2.2 Baud Rate 36
3.3.2.3 Sys. Address 37
3.3.2.4 Interface 37
3.3.2.5 IP Setup 37
3.3.2.5.1 More (SNMP, IP and Web Settings) 37
3.3.2.5.2 More (Traps and Time Settings) 38
3.3.3 Operations Menu 39
3.3.3.1 System 39
3.3.3.2 Buzzer 39
3.3.3.3 Control 39
3.3.3.4 Switching 39
3.3.3.5 Priority 40
3.3.3.6 Stby. Select 40
3.3.4 Fault Setup 41
3.3.4.1 MjrFaults 41
3.3.4.2 AuxFaults 42
3.3.4.3 Sw.Faults 42
3.3.4.4 Fault Logic 43
3.3.4.5 Fault Latch 43
3.3.5 Options Menu 44
3.3.5.1 Backup 44
3.3.5.2 Restore 44
3.3.5.3 Lamp Test 44
3.3.5.4 Password 45
3.3.5.5 Reset 45
3.3.5.6 More 46
3.3.5.7 Info 46
3.3.5.8 SSPA Ctrl 46
3.3.5.9 Back 47
3.3.6 Calibration Menu 48
3.3.6.1 Flt. Window 48

3.3.6.2 LNA/LNB PS 48
3.3.6.3 Calibrate 49
3.3.6.4 View LNA 49

Section 4: System Setup & Control with RCP 51
4.0 Introduction 51
4.1 Operation of 1:1 System with RCP2-1100 51
4.1.1 LNA / LNB 1:1 Redundant System Operation 52
4.1.1.1 LNA/LNB Fault Tracking 53
4.1.1.2 LNA / LNB Current Calibration 53
4.1.2 SSPA 1:1 Redundant System Operation 54
4.1.2.1 External Alarm Tracking 54
4.2 Operation of 1:2 System with RCP2-1200 55
4.2.1 LNA / LNB 1:2 Redundant System Operation 55
4.2.1.1 LNA/LNB Fault Tracking 57
4.2.1.2 LNA / LNB Current Calibration 57
4.2.2 SSPA 1:2 Redundant System Operation 58
4.2.2.1 External Alarm Tracking 58
4.3 Operation of 1:1 Fixed Phase Combined System with FPRC-1100 59
4.4 Operation of 1:2 Fixed Phase Combined System with FPRC-1200 60
4.5 RCP Remote Control of System SSPAs 61
4.5.1 Configuring the RCP for Remote Control Mode 62
4.5.2 Controlling PowerMAX Systems 64
4.5.3 Using M&C features of RCP to control a SSPA system 65
4.5.2.1 Change Mute State 65
4.5.2.2 Change Attenuation Level 66
4.5.2.3 Change Switch Mute Option Value 66
4.5.2.4 Units 68
4.6 View SSPA System Info 68
4.7 Advanced System Level Troubleshooting with RCP 70
4.7.1 Scenario 1 70
4.7.2 Scenario 2 70

Section 5: Theory of Operation 71
5.0 Design Philosophy 71
5.0.1 Redundant Power Supplies 71
5.0.2 Digital Core Board 72
5.0.3 I/O Board Assembly 72
5.0.4 Vacuum Fluorescent Display 73
5.0.5 Front Panel Mimic Display 73
5.1 Control Cable Considerations 74

Section 6: Maintenance & Troubleshooting 77
6.0 Introduction 77
6.1 Fuse Replacement 77
6.2 Firmware Programming 78
6.2.1 Required Hardware 78
6.2.2 Required Software 78
6.2.3 Web Upgrade Procedure 79
6.2.4 USB Port Upgrade Procedure 81
6.3 Restoring Factory Pre-set Settings on RCP2/FPRC 82
6.3.1 Automatic restore 82
6.3.2 Manual restore 82

6.4 Identifying and Replacing a Failed Power Supply 84
6.4.1 Removing a Faulted Power Supply Module 84
6.4.2 Installing a New Power Supply Module 84

Section 7: Remote Control Interface 85
7.0 Overview 85
7.1 Remote Control - Parallel 87
7.1.1 Control Outputs 87
7.1.2 Control Inputs 87
7.2 Serial Communication 88
7.2.1 Header Packet 88
7.2.1.1 Frame Sync Word 88
7.2.1.2 Destination Address 88
7.2.1.3 Source Address 89
7.2.2 Data Packet 89
7.2.2.1 Protocol ID 89
7.2.2.2 Request ID 89
7.2.2.3 Command 89
7.2.2.4 Data Tag 90
7.2.2.5 Data Address / Error Status / Local Port Frame Length 91
7.2.2.6 Data Length 92
7.2.2.7 Data Field 92
7.2.3 Trailer Packet 93
7.2.3.1 Frame Check Sequence 93
7.2.4 Timing issues 93
7.3 Serial Communication Protocol 94
7.4 Examples 98
7.4.1 Example 1 98
7.4.2 Example 2 99
7.4.3 Example 3 100
7.4.4 Example 4 101
7.5 Terminal Mode Serial Protocol 102
7.6 Ethernet Interface 106
7.6.1 Overview 106
7.6.2 IPNet Interface 106
7.6.2.1 General Concept 106
7.6.2.2 Setting IPNet interface 107
7.6.3 Using the RCP2 Web Interface 109
7.6.4 SNMP interface 113
7.6.4.1 Introduction 113
7.6.4.2 SNMP V3 Issues in RCP2 Controller 117
7.6.4.3 SNMP MIB Tree 119
7.6.4.4 Description of MIB Entities 120
7.6.4.5 Configuring RCP2 Unit to Work with SNMP Protocol 121
7.6.4.6 Connecting to a MIB Browser 122
7.6.5 Extended SNMP Operation 123
7.6.5.1 Fault Trap 123
7.6.5.2 Condition Trap 123
7.6.5.3 Extended SNMP MIB Tree 124
7.6.5.4 Extended SNMP MIB Tree Elements in Detail 126

Section 8: Maintenance Switch Controller 129
8.0 Introduction 129

8.1 Operation Modes 129
8.1.1 Directing the Output Signal to the System Output 129
8.1.2 Directing the Output Signal to the Dummy Load 129

Appendix A: Ethernet Interface Quick Set-Up 131
Appendix B: Proper 10/100 Base-T Ethernet Cable Wiring 135
Appendix C: RCP Control with Paradise Datacom Universal M&C 139
Appendix D: Firmware Revision History 143
Appendix E: Documentation 145

Figures

Figure 1-1: Outline Drawing, RCP2-1100 Redundant System Controller..... 12
Figure 2-1: RCP2/FPRC-1100/1200 Rear Panel..... 15
Figure 2-2: Rear Panel View of J3, MS3112E16-23S..... 16
Figure 2-3: Removable Power Supply Module 20
Figure 2-3: Removable Power Supply Module, High Power Option..... 21
Figure 2-5: 48V Removable Power Supply Module..... 22
Figure 3-1: RCP2/FPRC Front Panel, showing RCP2-1200 Mimic Display 23
Figure 3-2: Fault Indicators 23
Figure 3-3: Signal Path Mimic Display..... 24
Figure 3-4: Main Menu Initial Menu Selection 27
Figure 3-5: System Information Menu Structure..... 28
Figure 3-6: Serial Communication Parameters Menu..... 36
Figure 3-7: Operation Parameters Menu..... 39
Figure 3-8: Fault Setup Parameters Menu 41
Figure 3-9: Options Parameters Menu 44
Figure 3-10: Calibration Parameters Menu 48
Figure 4-1: Block Diagram, 1:1 Redundant System..... 51
Figure 4-2: Indoor/Outdoor Components, 1:1 Redundant System..... 52
Figure 4-3: Typical Schematic, 1:1 Redundant LNA System 53
Figure 4-4: Schematic, Typical 1:1 Redundant SSPA System 54
Figure 4-5: Block Diagram, 1:2 Redundant System..... 55
Figure 4-6: System Components, 1:2 Redundant LNA System..... 56
Figure 4-7: Schematic, Typical 1:2 Redundant LNA System 57
Figure 4-8: Block Diagram, 1:2 SSPA Redundant System 58
Figure 4-9: Block Diagram, 1:1 Fixed Phase Combined System 59
Figure 4-10: Block Diagram, 1:2 Fixed Phase Combined System 60
Figure 4-11: Switching Unit 2 from Standby to Online on POL 1 67
Figure 4-12: Switching Unit 1 from Standby to Online on POL 1 67
Figure 5-1: Block Diagram, Power Supply Configuration..... 72
Figure 5-2: Cable Losses to Transfer Switch..... 75
Figure 6-1: Controller Rear Panel Fuse Location 77
Figure 6-2: Web Upgrade Authentication Window..... 79
Figure 6-3: Firmware Upload Form 79
Figure 6-4: Proceed with Upgrade Prompt..... 80
Figure 6-5: Upload Process Message 80
Figure 6-6: Upload Completed Message..... 80
Figure 6-7: Windows Device Manager > Ports 81
Figure 6-8: Command Window Showing Program Prompts 81
Figure 7-1: RCP2 Remote Control Interface Stack..... 85
Figure 7-2: Parallel I/O Form C Relay 87
Figure 7-3: Opto-Isolated Parallel I/O Input..... 87
Figure 7-4: Basic Communication Packet 88
Figure 7-5: Header Sub-Packet 88
Figure 7-6: Data Sub-Packet..... 89
Figure 7-7: Trailer Sub-Packet..... 93
Figure 7-8: Connection Description..... 104
Figure 7-9: Communication Port Selection..... 104
Figure 7-10: Communication Properties..... 105
Figure 7-11: ASCII Setup..... 105
Figure 7-12: Terminal Mode Example 106
Figure 7-13: UDP Redirect Frame Example..... 108
Figure 7-14: Web Interface Screen 110

Figure 7-15: Web Interface Login Window 111
Figure 7-16: GetIF Application Parameters Tab 122
Figure 7-17: Getif MBrowser window, with update data in output data box 122
Figure 8-1: Press POS1 Key to Direct Signal to System Output..... 129
Figure 8-2: Press POS2 Key to Direct Signal to Dummy Load 129
Figure 8-3: Schematic, SSPA Utilizing Maintenance Switch and Controller 130
Figure A-1: TCP/IP Properties Window 131
Figure B-1: Modular Plug Crimping Tool 135
Figure B-2: Transmission Line 135
Figure B-3: Ethernet Cable Pin-Outs..... 136
Figure B-4: Ethernet Wire Color Code Standards 137
Figure B-5: Wiring Using 568A Color Codes 137
Figure B-6: Wiring Using 568A and 568B Color Codes 137
Figure C-1: New RCP2 Dialog Window..... 139
Figure C-2: Status Window 139
Figure C-3: Faults Window..... 139
Figure C-4: Settings Window 140
Figure C-5: IP Setup Window..... 140

Tables

Table 2-1: J3 Switch Connector, MS3112E16-23S 16
Table 2-2: Main Serial Port Pin Out..... 16
Table 2-3: Local Serial Port Pin Out..... 17
Table 2-4: Parallel I/O Signals 18
Table 2-5: External Alarm Port Pin Out 19
Table 2-6: Ethernet Port (J9) pin outs 19
Table 4-1: Compact Outdoor SSPA Wiring 62
Table 4-2: Rack Mount SSPA Wiring 63
Table 4-3: vBUC Converter Wiring..... 63
Table 5-1: Commonly Used Waveguide Transfer Switches..... 74
Table 5-2: Maximum Cable Length for Selected Switches (Single Switch Systems) ... 75
Table 7-1: Interfaces Enabled Based on Chosen Interface Setting Selection 86
Table 7-2: Command Byte Values 90
Table 7-3: Data Tag Byte Values 91
Table 7-4: Error Status Byte Values..... 92
Table 7-5: Request Frame Structure..... 94
Table 7-6:. Response Frame Structure 94
Table 7-7: System Settings Data Values..... 95
Table 7-8: System Condition Data Values..... 96
Table 7-9: System Threshold Data Values..... 97
Table 7-10: OSI Model for Ethernet IP Interface 109
Table 7-11: Detailed Settings..... 114
Table 7-12: Detailed Thresholds 115
Table 7-13: Detailed Conditions..... 116
Table D-1: Firmware Revision History..... 143

1.0 Introduction

This section provides the general information for the Teledyne Paradise Datacom LLC line of Redundant Control Panels. The RCP2-1100 and RCP2-1200 are used for 1:1 and 1:2 redundant systems, respectively. The FPRC-1100 and FPRC-1200 are used for Phase Combined Solid State Power Amplifier (SSPA) systems.

This section describes the supplied equipment and safety precautions.

1.1 Description

The RCP2/FPRC controller is used to monitor and control amplifiers configured in 1:1 and 1:2 redundant systems. The RCP2-1100 and FPRC-1100 controllers provide control of two amplifiers and their corresponding transfer switch. The RCP2-1200 and FPRC-1200 controllers monitor and control three amplifiers and two switches.

The RCP/FPRC Series of redundant controller can be used in LNA, LNB, and SSPA systems as well as frequency converter systems. A mimic display on the front panel indicates the RF path and the fault status of the equipment. User interface and control is provided in several forms:

- Front Panel, Local Control
- 37-pin Parallel Control Port with Contact Closures and Opto-Isolated Inputs
- Serial Data Control via RS232 or RS485 (2 or 4-wire)
- 10/100 Base-T Ethernet interface. Ethernet control options include embedded web page, SNMP interface and propriety IP interface to connect over Teledyne Paradise Universal M&C software

Additional features include:

- Universal Input, Power Factor Corrected Power Supply
- User Friendly Front Panel LCD Display for Local Monitor & Control
- Dual AC Mains Entries with removable power supplies.

1.2 Equipment Supplied

The following equipment is supplied with each unit:

- The RCP2/FPRC Redundant Controller
- (2) IEC Line Cord Sets
- Redundant Controller Operations Manual

Optional Equipment includes:

- Rack Slides
- 100 ft. (30 m) Control Cable
- Switch Plate Mating Connector
- DC Operation

1.3 Specifications

Refer to the specification sheets in **Appendix E** for complete specifications on the RCP2/FPRC Redundant System Controllers.

1.3.1 Outline Drawings

Figure 1-1 shows an outline drawing of an RCP2-1100 redundant controller. The outline drawings for the RCP2-1200 and FPRC units are the same in dimension, with differences only in the signal path mimic display and the number of fault indicators.

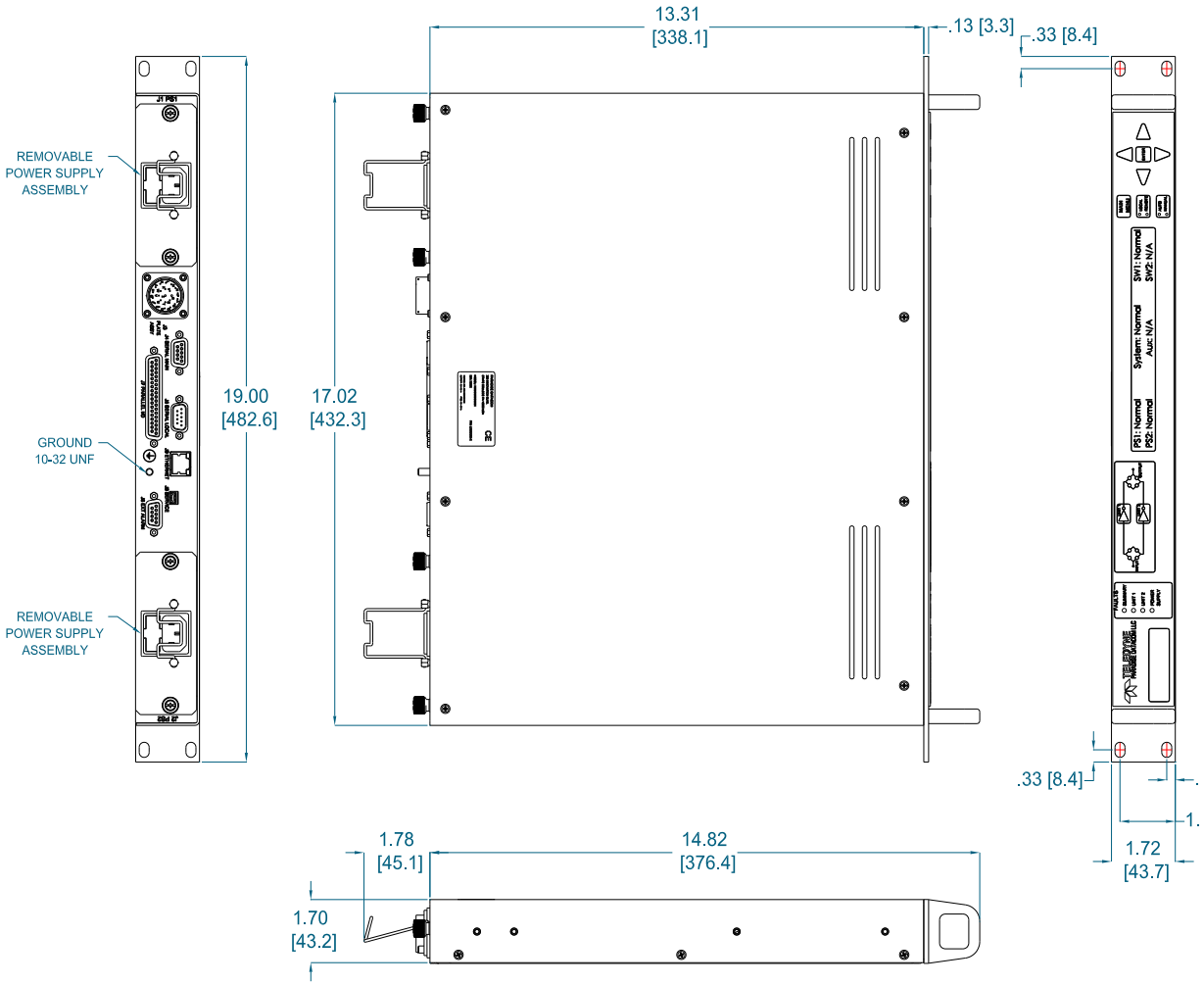

Figure 1-1: Outline Drawing, RCP2-1100 Redundant System Controller

1.4 Safety Considerations

Potential safety hazards exist unless proper precautions are observed when working with this unit. To ensure safe operation, the user must follow the information, cautions and warnings provided in this manual as well as the warning labels placed on the unit.

1.4.1 High Voltage Hazards

High Voltage for the purpose of this section is any voltage in excess of 30 volts. Voltages above this value can be hazardous and even lethal under certain circumstances. Care should be taken when working with devices that operate at high voltage.

- All probes and tools that contact the equipment should be properly insulated to prevent the operator from coming in contact with the voltage.
- The work area should be secure and free from non-essential items.
- Operators should never work alone on high voltage devices. There should always be another person present in the same work area to assist in the event of an emergency.
- Operators should be familiar with procedures to employ in the event of an emergency, i.e., remove all power, CPR, etc.

An AC powered unit will have 115 VAC or 230 VAC entering through the AC power connector. Caution is required when working near this connector, the AC circuit breaker, or the internal power supply.

1.4.2 High Current Hazards

Many high power devices are capable of producing large surges of current. This is true at all voltages, but needs to be emphasized for low voltage devices. Low voltage devices provide security from high voltage hazards, but also require higher current to provide the same power. High current can cause injury from burns and explosion. The following precautions should be taken on devices capable of discharging high current:

- Remove all conductive personal items (rings, watches, medals, etc.)
- The work area should be secure and free of non-essential items.
- Wear safety glasses and protective clothing.
- Operators should never work alone on high risk devices. There should always be another person present in the work area to assist in the event of an emergency.
- Operators should be familiar with procedures to employ in the event of an emergency, i.e., remove all power, CPR, etc.

1.4.3 Electrical Discharge Hazards

A spark can not only create ESD reliability problems, it can also cause serious safety hazards. The following precautions should be taken when there is risk of electrical discharge:

- Follow all ESD guidelines
- Remove all flammable material and solvents from the area.
- All probes and tools that contact the equipment should be properly insulated to prevent electrical discharge.
- The work area should be secure and free from non-essential items.
- Operators should never work alone on hazardous equipment. There should always be another person present in the same work area to assist in the event of an emergency.
- Operators should be familiar with procedures to employ in the event of an emergency, i.e., remove all power, CPR, etc.
- Keep in mind that ground potential on both ends of long cable runs may be significantly different due to various factors. These ground potentials equalized by a cable ground signal line. Hence, it always a good practice to make connect/disconnect interface connectors when the equipment on both ends of a long cable run is powered down. This practice will minimize risk of damage of electrical interfaces due to unbalanced ground potentials.

2.0 Introduction

This section provides information for the initial inspection, installation, and external connections for the RCP2/FPRC series redundant system controllers.

2.1 Inspection

When the unit is received, an initial inspection should be completed. First ensure that the shipping container is not damaged. If it is, have a representative from the shipping company present when the container is opened. Perform a visual inspection of the equipment to make sure that all items on the packing list are enclosed. If any damage has occurred or if items are missing, contact:

Teledyne Paradise Datacom LLC
328 Innovation Blvd., Suite 100
State College, PA 16803 USA
Phone: +1 (814) 238-3450
Fax: +1 (814) 238-3829

2.2 Mounting

The Teledyne Paradise Datacom Redundant System Controller is designed to be mounted in a standard EIA 19 inch equipment rack. The depth of the chassis, excluding rear panel connectors, is 13.19 inches (335 mm). The height of the chassis is 1.7 inches (44 mm) or 1 rack unit. Optional 22 inch (559 mm) rack slides with extensions are available.

2.3 Storage and Shipment

To protect the RCP2/FPRC during storage or shipping, use high quality commercial packing methods. Reliable commercial packing and shipping companies have the facilities and materials to adequately repack the equipment.

2.4 Cable Connections

The RCP2/FPRC controller has a wide range of I/O interconnections available at the rear panel. The controller rear panel is shown in **Figure 2-1**.

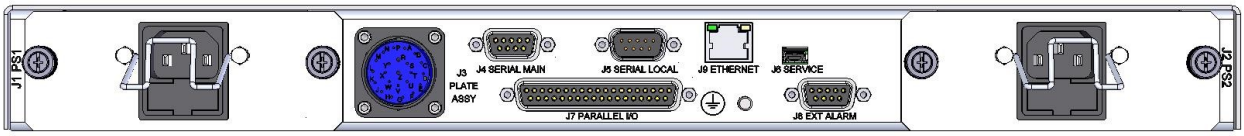

Figure 2-1: RCP2/FPRC-1100/1200 Rear Panel (Standard AC Input)

2.4.1 Control Cable Connector (J3) - MS3112E16-23S

The primary connection between the controller and the LNA/LNB (Low Noise Amplifier/ Low Noise Block Converter) switch plate or SSPA (Solid State Power Amplifier) switch assembly is through J3. The connector is a 23-pin circular connector, type MS3112E16 -23S (See **Figure 2-2** and **Table 2-1**). For external waveguide switches, a standard 100 ft. (30m) cable, L201061 should be used.

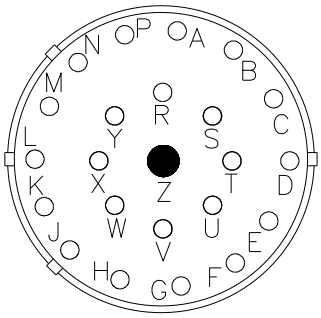

Figure 2-2: Rear panel view of J3, MS3112E16-23S

Table 2-1: J3 Switch Connector, MS3112E16-23S

Pin	Function	Pin	Function
L	Power Supply #1 +13-17 VDC, 900mA or +24V, 1.5A (-HP version only)	F	Switch Common, +26 VDC, 5A max
J	Power Supply #2 +13-17 VDC, 900mA or +24V, 1.5A (-HP version only)	H	Switch Common, +26 VDC, 5A max
G	Power Supply #3 +13-17 VDC, 900mA or +24V, 1.5A (-HP version only)	T	Switch #2, Position 1 (Rx)
E	Switch Common, +26 VDC, 5A max	V	Switch #2, Position 1 (Rx) (primary)
B	AMP Support GND	N	Switch #2, Position 2 (Rx)
D	Switch Common, +26 VDC, 5A max	R	Switch #2, Position 2 (Rx) (primary)
W	Switch #1, Position 1 (Tx) (primary)	A	AMP Support GND
U	Switch #1, Position 1 (Tx)	C	AMP Support GND
P	Switch #1, Position 2 (Tx)	K	Switch Common, +26 VDC, 5A max
S	Switch #1, Position 2 (Tx) (primary)	M	Switch Common, +26 VDC, 5A max

2.4.2 Serial Port, Main (J4) - DB9 (F)

The main serial port is for connection with any host computer. This port contains both RS-232 and RS-485 communication in half duplex. RS-485 interface is compatible with 2- or 4-wire interface connection. As an additional protection measure, this port features full galvanic isolation from the chassis ground. For convenience, a set of Form C relay contacts are available at this port as a Service Request. The Service Request is essentially a Summary Alarm for any system faults that occur. The baud rate and other communication parameters are selectable via the front panel menu.

The pin-out is shown in **Table 2-2**. Note that the pin-out is standard DTE; a null modem is not required when connecting to a standard PC serial port.

Table 2-2: Main Serial Port (J4) Pin Out

Pin	Function	Notes
1	RS-485 TX+	
2	RS-232 Out or RS-485 TX-	
3	RS-232 In or RS-485 RX-	
4	RS-485 RX+	
5	Signal Ground	
6	Service Request 1	Closed on Fault
8	Service Request 2	Open on Fault
7	Service Request Common	Form C Common
9	Termination (120 Ohm)	Connect to pin 4 to terminate unit on end of bus

If required, a 120 ohm RS-485 termination resistor is provided at pin 9. It should be connected to pin 4 to provide a 120 ohm termination on the RS-485 bus.

2.4.3 Serial Port, Local (J5) - DB9 (M)

The local serial port is used to support special transceiver systems and remote control panels. The baud rate of this port is fixed at 9600 Baud and cannot be changed. J5 is permanently configured for RS-485 half duplex communication. **Table 2-3** details the local serial port pin-out. Port features full galvanic isolation from chassis ground.

Table 2-3: Local Serial Port (J5) Pin Out

Function	Pin	Notes
RS-485 RX+	1	
RS-485 RX-	2	
RS-485 TX-	3	
RS-485 TX+	4	
Signal Ground	5	
Termination (120 Ohm)	9	Connect to pin 1 to terminate unit on end of bus

2.4.4 Service Port (J6) - Mini USB

A 5-contact Mini USB connector is used to provide flash re-programmability for the RCP controller card. In order to reload controller board firmware, connect this port to a standard PC USB port. See **Section 6** for a description of the firmware upgrade procedure.

2.4.5 Parallel I/O Connector (J7) - DB37 (F)

The RCP controller has a full compliment of parallel monitor and control lines. A 37-pin D sub-style connector is used for the parallel I/O signals, which are detailed in **Table 2-4**.

Ten Form-C relays are used for converter, switch position, and mode control. Each Form-C contact has a rating of 30 VDC @ 0.5 A, 110 VDC @ 0.3 A, and 125 VAC @ 0.5 A. The inputs and ground pins are isolated from the rest of the unit's circuitry. Inputs are activated by pulling it down to the isolated ground pin. In order to fully utilize the built-in inputs protection, it is recommended to keep the input's ground isolated from the chassis ground.

See **Section 4.5.2.3** for instructions on how to use the Auto/Manual Input (Pin 16) as an External Mute Input.

Table 2-4: Parallel I/O Signals

Identification	Signal	Pin	Function	Notes
Amp 1 Alarm	Output	1	Closed on Fault	Relay Contacts: 30VDC @ 0.5A
		20	Common	
		2	Open on Fault	
Amp 2 Alarm	Output	21	Closed on Fault	Relay Contacts: 30VDC @ 0.5A
		3	Common	
		22	Open on Fault	
Amp 3 Alarm	Output	4	Closed on Fault	
		23	Common	
		5	Open on Fault	
Auto / Manual Mode	Output	24	Closed on Manual	
		6	Common	
		25	Closed on Auto	
Local / Remote Mode	Output	7	Closed on Local	
		26	Common	
		8	Closed on Remote	
Switch #1 Position	Output	27	Switch #1, Position 1	
		9	Common	
		28	Switch #1, Position 2	
Switch #2 Position	Output	10	Switch #2, Position 1	
		29	Common	
		11	Switch #2, Position 2	
Power Supply #1 Alarm	Output	30	Closed on Fault	
		12	Common	
		31	Open on Fault	
Power Supply #2 Alarm	Output	13	Closed on Fault	
		32	Common	
		14	Open on Fault	
Priority Setting	Output	33	Closed on Priority 2	
		15	Common	
		34	Closed on Priority 1	
Fault Clear	Input	37	Ground to Activate	5mA max current on all inputs
Priority Select	Input	17	Ground to Activate	Toggle Function
Auto / Manual	Input	16	Ground to Activate	Toggle Function; Alt Funct.: Ext. Mute Input
Amp 3 Standby	Input	36	Ground to Activate	
Amp 2 Standby	Input	35	Ground to Activate	
Amp 1 Standby	Input	18	Ground to Activate	
Inputs Ground (isolated)	Common	19		

2.4.6 External Alarm Port (J8) - DB9 (F) [IO Board Version 001]

An external alarm port is provided to allow maximum flexibility of configurations. This allows the user to interface with the alarm output of other equipment into the RCP controller. Inputs are protected against ESD of ±15 kV using the Human Body model; against ESD of ±8kV using the Contact Discharge method specified in IEC1000-4-2; and against ESD of ±15 kV using the Air Gap method described in IEC1000-4-2. **Table 2-5** shows the external alarm pin-out.

Table 2-5: External Alarm Port (J8) Pin Out

Function	Pin	Notes
External Alarm 1	1	Closure to Ground, 5mA max short circuit current, 5 VDC open circuit voltage
External Alarm 2	2	
External Alarm 3	3	
Ground	4,8,9	
Auxiliary Alarm 1	5	Closure to Ground, 5mA max short circuit current, 5 VDC open circuit voltage
Auxiliary Alarm 2	6	
Auxiliary Alarm 3	7	

2.4.7 Ethernet Port (J9) - RJ45 (F)

This is a RJ45 connector with integrated magnetics and LEDs. This port becomes the primary remote control interface when the Interface option is selected to “IPNet” or SNMP interface as described in **Section 7.6.2.2**. This feature allows the user to connect the RCP to a 10/100 Base-T office Local Area Network and have full-featured Monitor & Control functions through a web interface. See **Table 2-6**.

Table 2-6: Ethernet Port (J9) pin outs

Pin #	Function / Description
1	TX+
2	TX-
3	RX+
6	RX-
4,5,7,8	GND

Note: IP address, Gateway address, Subnet mask, IP port and IP Lock address need to be properly selected prior to first use (see **Appendix B**).

LED lamps on the connector indicate network status. A steady Green light indicates a valid Ethernet link; a flashing Yellow LED indicates data transfer activity (on either the Transmit and Receive paths). Starting with firmware version 6.00, the controller can support multiple remote control interfaces. See **Section 7** for details.

2.5 Prime Power Connection (J1, J2)

Two separate removable power supplies are provided for fully redundant operation. Either of the two supplies is capable of operating the system and its associated switches. Two AC power connectors are provided on the rear panel (J1,J2).

2.6 Removable Power Supply Modules

The RCP unit has a redundant power supply array consisting of two modules. A failed power supply module may be removed from the RCP chassis by loosening the two captured thumbscrews and sliding the module out of the chassis, then unplugging the quick-disconnect power pole connectors.

2.6.1 24V Power Supply Module

Figure 2-3 shows an outline drawing of a power supply module.

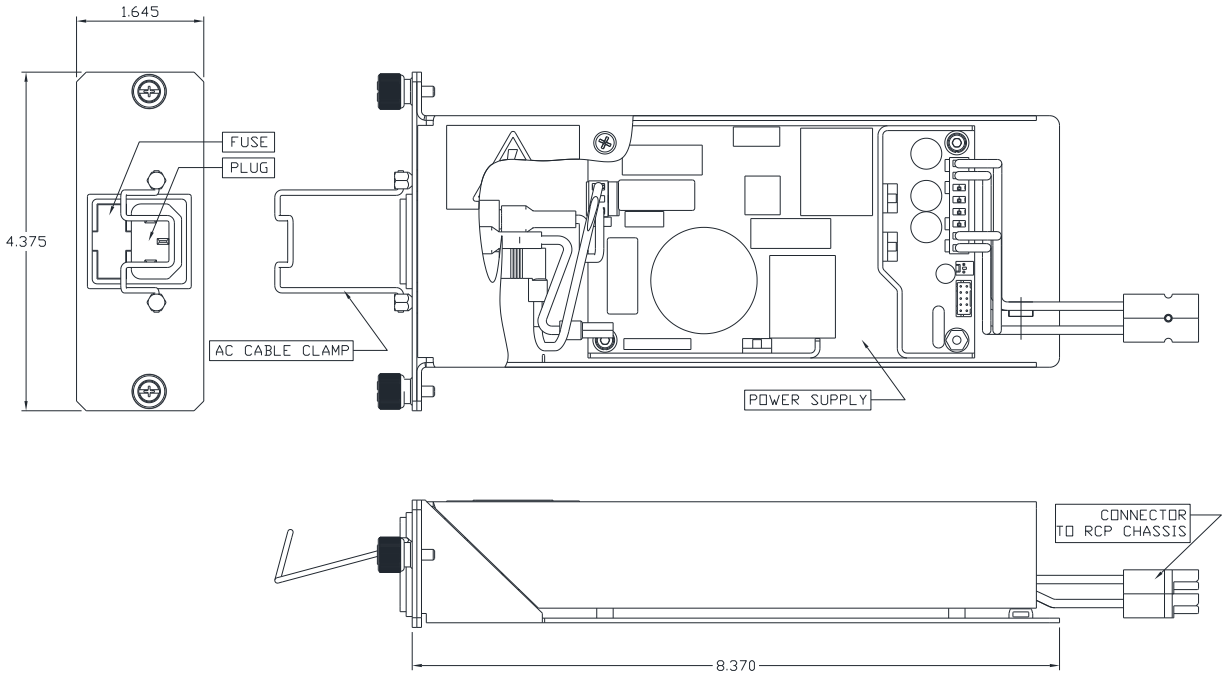

Figure 2-3: Removable Power Supply Module

The following list comprises the specifications for the standard power supply module:

Plug: IEC, 250V, 10A, Male plug with wire-form AC Cable Clamp
Fuse: 2 Amp 5x20mm
Power Supply: 85-264 V input, 28V output, 175W
Connector to RCP chassis: Quick-connect Power pole

See Section 6.4 for directions on identifying and replacing a failed power supply module.

2.6.2 24V Power Supply Module, High Power option

Figure 2-4 shows an outline drawing of a power supply module for units utilizing the High Power (-HP) option.

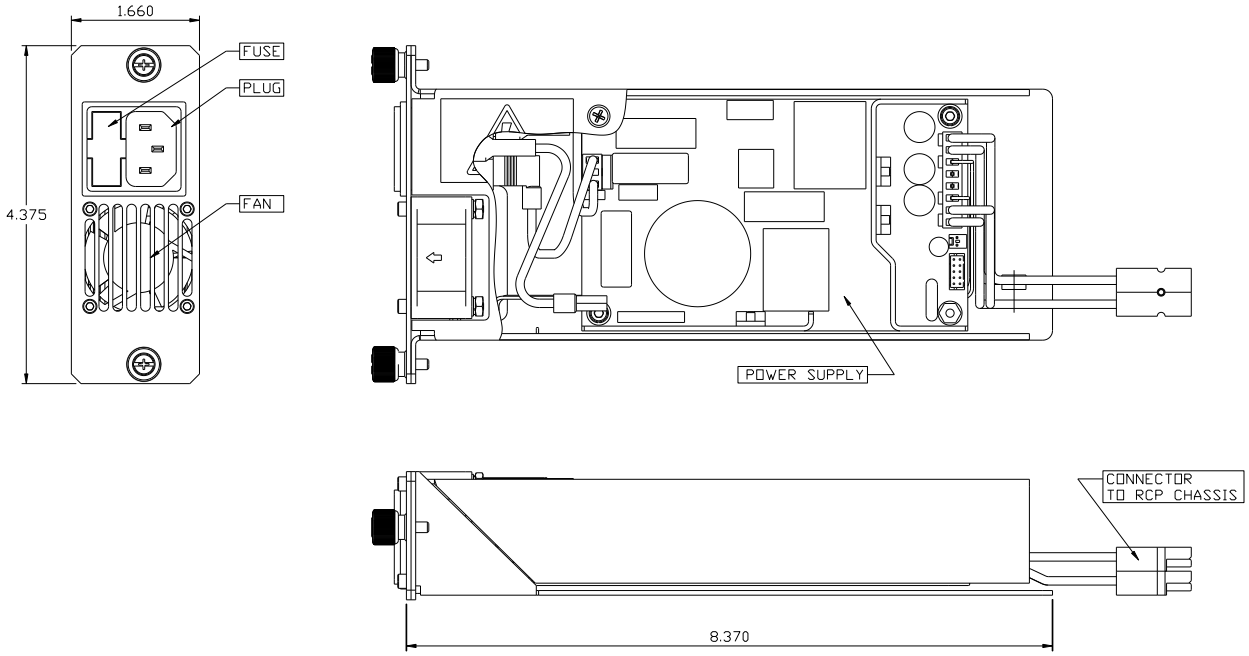

Figure 2-4: Removable Power Supply Module, High Power option

The following list comprises the specifications for the standard power supply module:

Plug: IEC, 250V, 10A, Male plug
Fuse: 2 Amp 5x20mm
Power Supply: 85-264 V input, 28V output, 175W
Fan: 40mm, 24V, 4.9 CFM
Connector to RCP chassis: Quick-connect Power pole

See **Section 6.4** for directions on identifying and replacing a failed power supply module.

2.6.3 48V Power Supply Module

Figure 2-5 shows an outline drawing of a 48V power supply module.

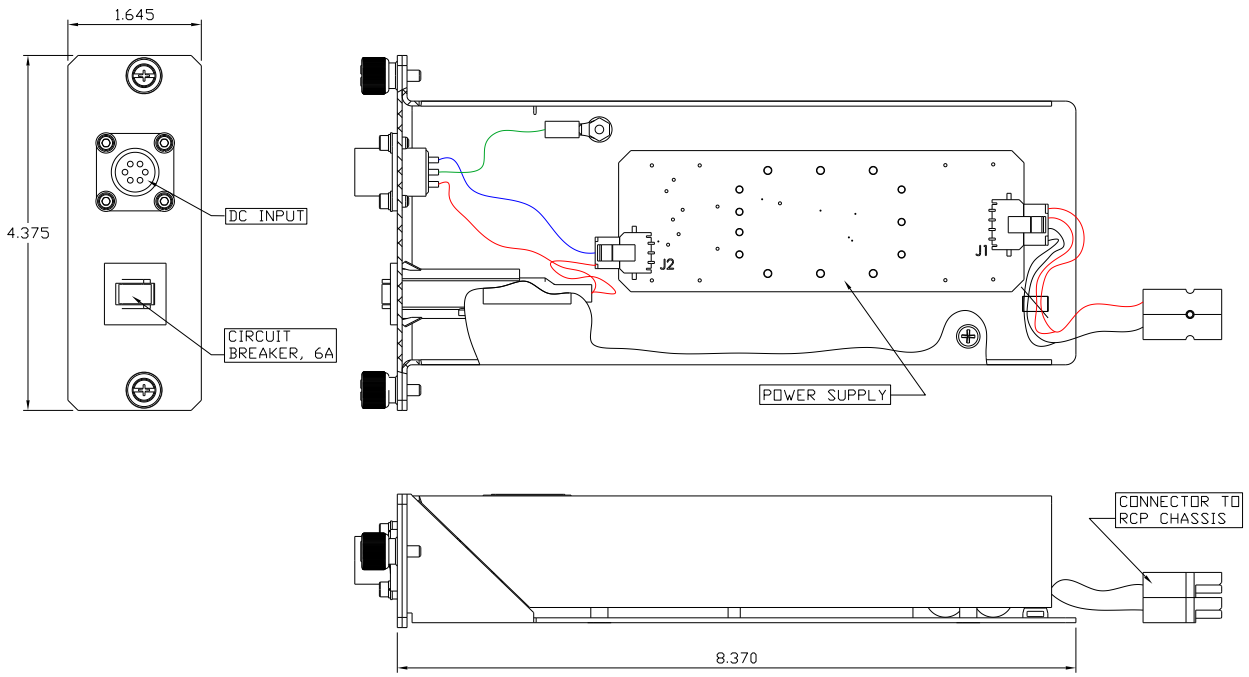

Figure 2-5: 48V Removable Power Supply Module

The following list comprises the specifications for the 48V power supply module:

Plug: MS3112E10-6P Circular MIL connector, 6-pin (MS3116F10-6S mating)
Circuit Breaker: 6 Amp
Power Supply: 48V, 150W
Connector to RCP chassis: Quick-connect Power pole

See **Section 6.4** for directions on identifying and replacing a failed power supply module.

3.0 Introduction

The front panel is used to locally control the system. **Figure 3-1** shows the front panel of a 1 RU RCP2/FPRC controller.

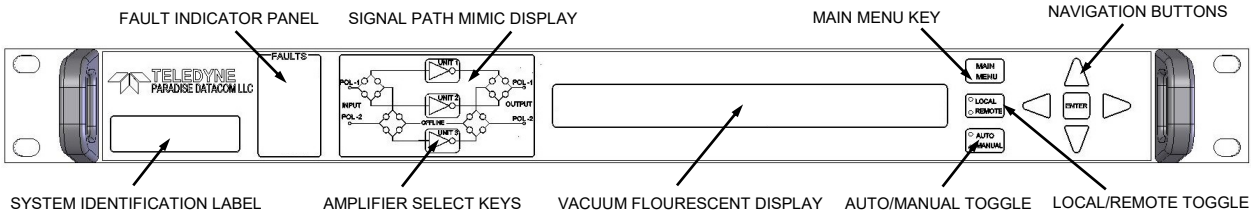

Figure 3-1: RCP2/FPRC Front Panel, showing RCP2-1200 Mimic Display

3.0.1 System Identification

A label on the lower left hand corner of the controller front panel displays the model number and a brief description of the unit. The serial number is located on the rear panel of the controller.

3.0.2 Fault Indicators

The fault indicator LEDs illuminate RED when the corresponding fault condition occurs. There are fault lights for Summary, Unit 1, Unit 2, and Power Supply faults. The RCP2-1200 and FPRC-1200 also includes a fault light for Unit 3. See **Figure 3-2**.

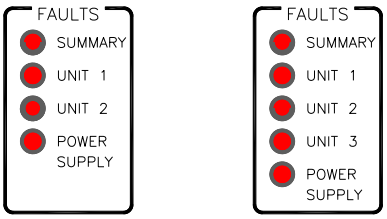

Figure 3-2: Fault Indicators

The image at left shows the fault indicators for models RCP2-1100 and FPRC-1100; the figure at right shows the fault indicators for models RCP2-1200 and FPRC-1200.

3.0.3 Signal Path Mimic Display

The front panel mimic display provides a visual representation of the redundant system block diagram. Green LEDs indicate the position of the transfer switches showing the RF signal path from the RF input to the RF output. **Figure 3-3** shows the various signal path mimic displays based on the controller model.

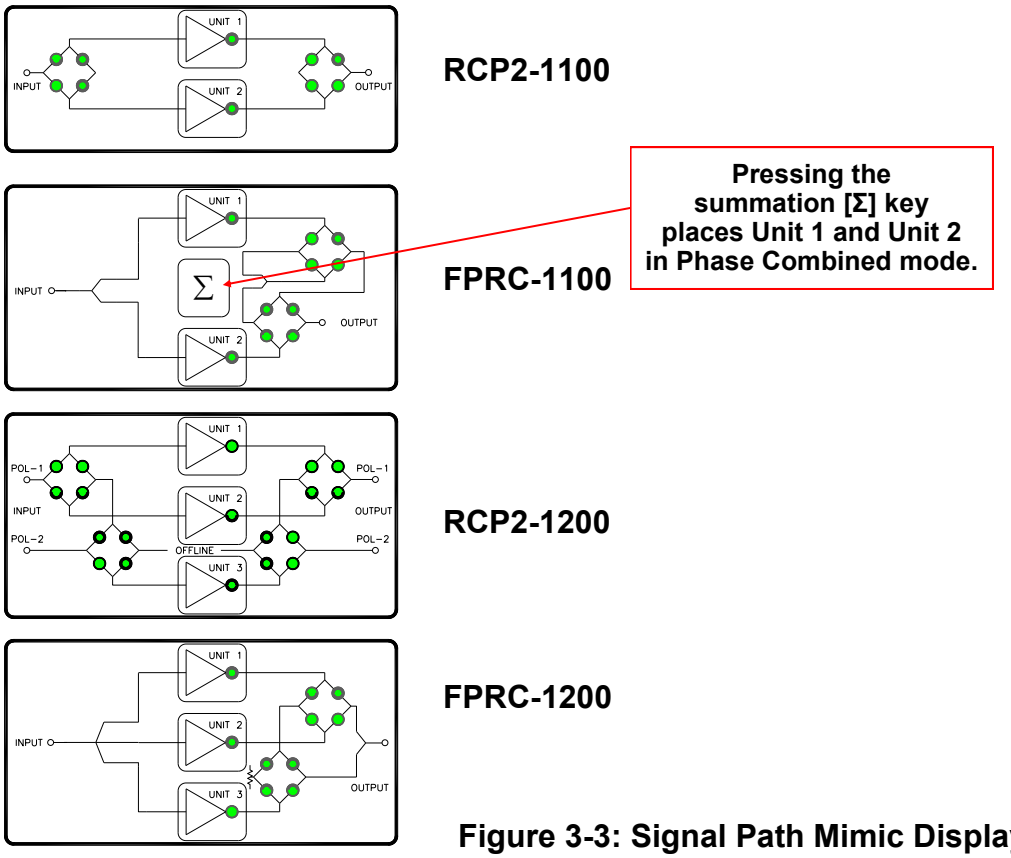

Figure 3-3: Signal Path Mimic Display

3.0.4 Amplifier Select Keys

The Amplifier Select Keys on the mimic display panel allow the user to select the online converter. These buttons can also be used to manually switch the standby converter on line when in manual mode. The on-line amplifier is designated by the illuminated green LED.

3.0.5 Vacuum Fluorescent Display

The Vacuum Fluorescent Display (VFD) provides a convenient method of selecting various operating parameters of the controller. All internal settings can be achieved via the VFD and menu structure. There is no need to access the interior of the controller to adjust or reconfigure hardware settings. The VFD also provides detailed information about fault conditions.

3.0.6 Main Menu Key

The **Main Menu** key is a convenient method for instantly returning to the VFD main menu. No matter what menu screen Is currently displayed on the VFD, pressing this key returns the user to the main menu, eliminating the need to scroll backward through several menu levels. See **Section 3.3** for information regarding the menu selections.

3.0.7 Local / Remote Key

The **Local/Remote** key selects whether the controller is operational by front panel (local) control or by remote control. Remote control includes both the rear panel parallel control signals as well as the serial communication.

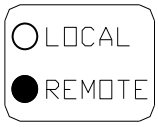

3.0.8 Auto / Manual Key

This key selects between Auto and Manual Switching Mode. In Auto mode a converter failure will result in automatic switching of the system's transfer switches. In manual mode a converter failure will result in fault alarms but no switchover will occur.

3.0.9 Display Navigation Keys

The display navigation keys allow easy movement through the VFD menu structure. Both right and left as well as up and down movement is available using the triangular shaped keys.

3.0.10 Enter Key

The enter key is used to select a given menu item. In conjunction with the navigation keys, it is easy to locate and select a desired function.

3.1 Local / Remote control

Control of the RCP/FPRC can be handled through Front Panel operation, or remotely through Parallel or Serial communication to a computer.

For local (front panel) operation of the controller, simply toggle the **Local/Remote** key until the yellow LED indicator is illuminated on Local. When in Remote mode the front panel buttons will be inoperative. The indicators and VFD display will still show the status of the system. The **Local/Remote** key is always operative so that the appropriate mode can be selected. Remote operation enables the serial communication and parallel I/O control.

3.2 Methods of switching

There are three methods of switching converters in a redundant system.

1. Manual Mode
2. Automatic Mode
3. Physically Rotating either the Tx or Rx Transfer Switch

3.2.1 Manual Mode

The controller is set to Manual mode by toggling the **Auto/Manual** key so that the yellow LED is indicating Manual mode. Make sure that the **Local/Remote** key is on Local mode so that the **Auto/Manual** key is operative. Either unit can be selected online by pressing the amplifier buttons on the mimic display. The online unit is shown by the green LED embedded in the button. Only the online unit may give away its online status.

3.2.2 Auto Mode

Automatic Switch mode is entered by toggling the **Auto/Manual** key until the yellow LED is indicating Auto mode. The online and standby amplifiers can be selected by pressing the appropriate buttons on the mimic display. This configuration will remain until a fault condition occurs. Upon failure, the appropriate fault light will illuminate and switchover will automatically occur.

3.2.3 Physically Rotating Transfer Switch

It is possible to physically rotate the shaft on either the TX or Rx transfer switch to change the online and standby amplifier positions. This can be done either in manual or automatic mode. When the switch is physically rotated in automatic mode the controller will attempt to return the switch to it previous position.

The controller will make two attempts to return the switch before accepting the new position. The front panel mimic display will show the correct switch path settings even when the switch is physically rotated.

3.3 Local (Front Panel) Menu Structure

Figure 3-4 shows the VFD Menu Structure hierarchy. There are six main levels of menu selections.

1. **Sys.Info** – System Information menu sublevel
2. **Com.Setup** – Serial Communication related settings
3. **Operation** – System operation related settings
4. **Flt.Setup** – Fault handling settings
5. **Options** – Miscellaneous settings and functions
6. **Calibr.** – Calibration related functions

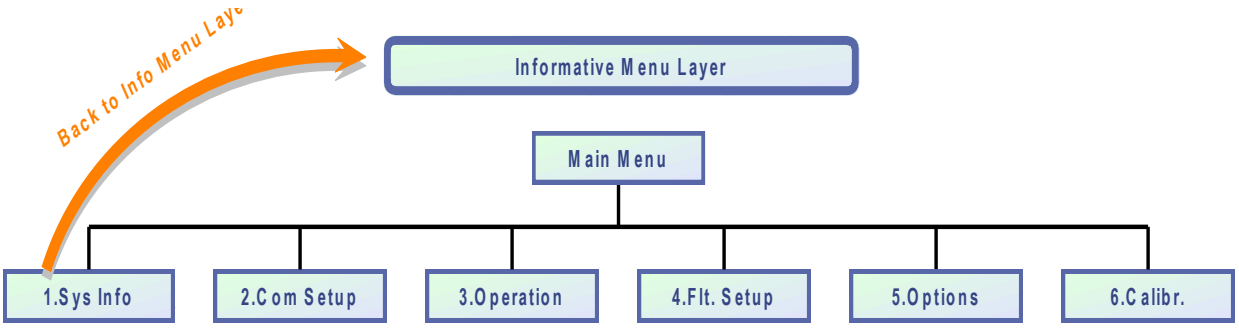

Figure 3-4: Main Menu Initial Menu Selection

Main Menu navigation is available by pressing five buttons on the front panel keypad: the **Left Arrow** (◄) key, **Right Arrow** (►) key, **Up Arrow** (▲) key, **Down Arrow** (▼) key and the **Enter** key. The bottom right corner of the VFD display shows the item selection. All selectable items have a sequential number.

The user can increment or decrement the selected item number by using **Left Arrow** (◄) and **Right Arrow** (►) keys. Selection is final when the operator presses the **Enter** key. Pressing the **Main Menu** key brings the menu level to the main menu page from any stage of the menu selection.

Some items within the menu structure have alternative methods for value selection. When this type of selection is specified, the selection keys are: **Up Arrow** (▲) and **Down Arrow** (▼) keys for selecting numbers in x10 increments and **Left Arrow** (◄) and **Right Arrow** (►) keys for x1 increments. Selection is always specified by special notation on the far right hand side of the VFD.

Note: When the "Fault Latch" option is selected (as described in **Section 3.3.4.5**), pressing the Enter key will clear all system faults.

3.3.1 Sys Info

This is the informative sublevel of the menu structure, as shown in **Figure 5**. This menu consist of seven pages of general system information that can be browsed by pressing the **Up Arrow** (▲) and **Down Arrow** (▼) keys on the front panel keypad.

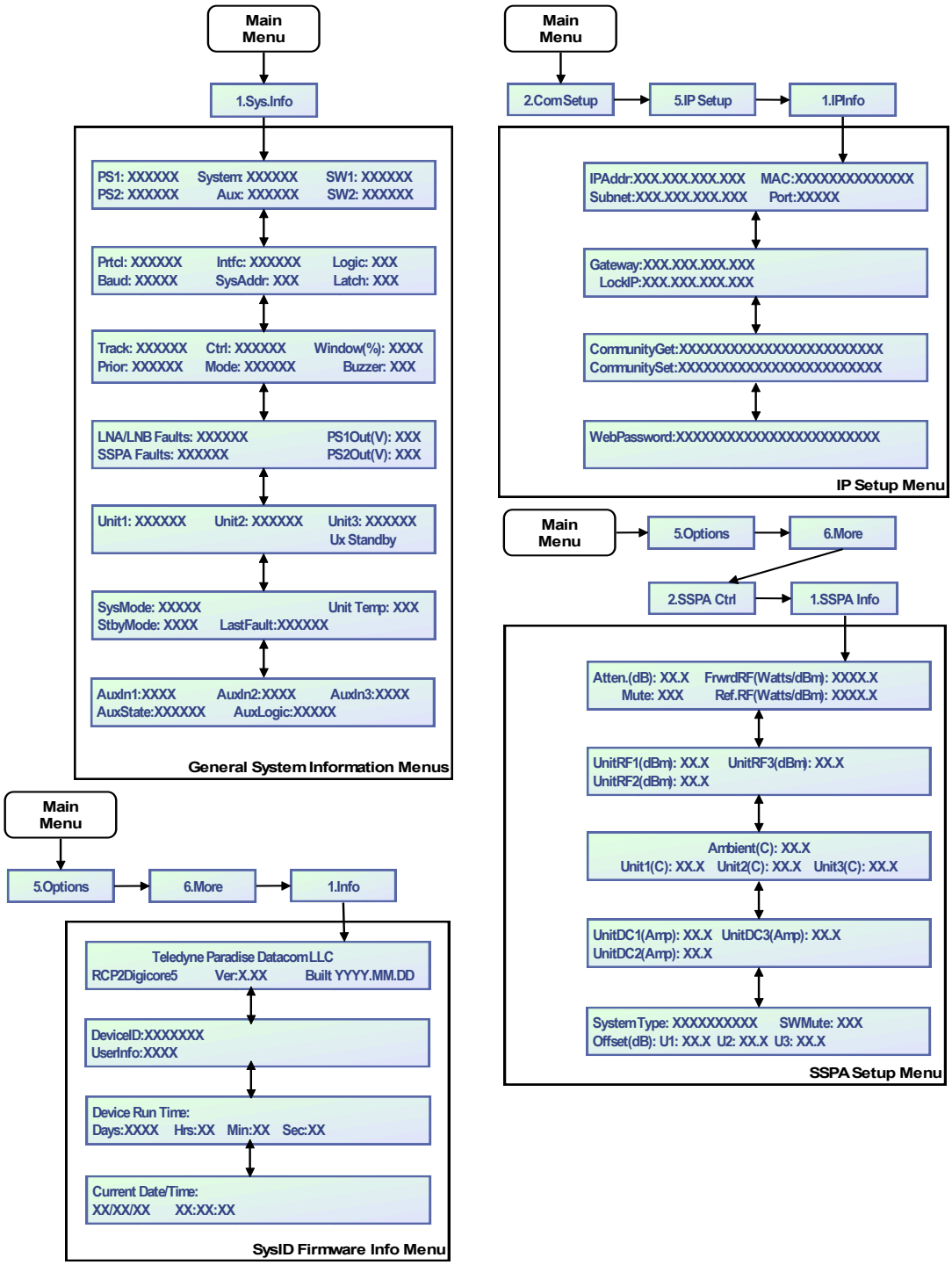

Figure 3-5: System Information Menu Structure

RCP firmware version 3.40 introduced additional navigational features to the System Information Menu. These features allow the user to quickly switch between the general System Info menus and the SSPA System Info menus by pressing the **Left Arrow** (◄) and **Right Arrow** (►) keys on front panel keypad (See **Figure 3-5**).

3.3.1.1 Sys Info - Page 1

This page is the system information page of the Sys Info menu. This page shows the status of both power supplies **PS1** and **PS2**. The controller monitors the output voltage of each internal power supply. The power supply voltage is considered "Normal" if its output voltage level is above 23V and "Fault" when output voltage drops below 22V. A power supply fault is always considered a major fault.

Also included on page one of Sys Info is the **System** status. This is the status of the system summary alarm. The system status will be "Fault" or "Normal" according to the state of the various fault monitoring circuitry.

Aux is the state of the auxiliary fault input. Auxiliary faults are user configurable. Depending on the system configuration they may be enabled or disabled and track opposite logic states. When auxiliary faults are enabled, they will always trigger a summary fault. Auxiliary faults can be paired with main system faults. When pairing mode is enabled, a detected fault will be treated as a fault in one of the units and could initiate switchover in redundant systems.

SW1 and **SW2** are the position and fault state indicators of the transfer switch(es) in the system. Possible states are: "POS1" (Switch position 1), "POS2" (Switch position 2), and "Fault". In a system using only one switch, SW2 will display "N/A" (Not available).

> **Note on Switch Fault:**
> If the controller cannot read the position indicator lines on the transfer switch, it will be considered to be in a fault condition. This can occur when a transfer switch becomes stuck between valid positions. The Summary fault state may or may not be triggered depending on the user settings. The default is to consider a switch fault as a minor fault and will not trigger a summary alarm.

3.3.1.2 Sys Info - Page 2

This page of the Sys Info menu pertains to the internal monitor and control settings of the RCP controller.

Prtcl is the serial communication protocol settings. Possible settings are "Auto", which automatically detects either Standard or Locus Communications protocol; or "Standard", the Standard extended protocol.

Baud is the serial communication Baud rate selection. The available Baud rates include: "2400", "4800", "9600", "19200", and "38400".

Interfc is the physical interface used for serial communication. Available interfaces are: “RS-232”, “RS-485”, “IPNet” and “SNMP”.

SysAddr sets the controller unique network address. The address range is 1 to 255. As with any RS-485 network, the address must be unique within the serial network. The controller will answer on serial commands only if its address matches the address sent in the serial packet.

Logic refers to the fault state logic for the External Alarm Input port, J8. The factory
default setting is a logic high state for external alarm fault status. This is consistent with (contact open = fault) logic used in most systems. However, if used in a system that employ reverse logic, this setting can be used to adjust the RCP controller accordingly.

Latch refers to the fault latching function. The possible states are “Enb” and “Dis” for fault latching enabled and fault latching disabled. The factory default state is for fault latching to be enabled. When fault latching is enabled, after a fault has been detected the controller will continue to indicate an alarm even after the external fault may have been removed. To clear a latched fault, press the **Main Menu** key, press the **Enter** key twice, select **1.Clear Faults** and press the **Enter** key.

3.3.1.3 Sys Info - Page 3

This page pertains to the internal monitor and control settings of the RCP controller.

Track refers to the method used to track major system faults. Valid states are “LNA”, “EXT” (External), “Both” and “SerialCom”. This option specifies which elements are to be included into the redundant system. The user can select fault tracking based on internal current monitoring such as in LNA/LNB systems, by external inputs from the External Alarm port, J8, by both internal current monitoring and external input, or over serial communication.

Prior displays the priority control of the system, and is only applicable to 1:2 redundant systems in which a priority must be assigned to the standby amplifier in the case that both online amplifiers exhibit failures. The priority setting determines the switch position (polarity) the system should assign to the standby amplifier, either “Pol1” or “Pol2”.

Ctrl specifies “Local” or “Remote” mode of controller operation. When in Remote mode, all front panel keys are disabled with exception of the **Local/Remote** key.

Mode indicates and selects the “Automatic” or “Manual” mode of the controller. This function can be accessed by the dedicated **Auto/Manual** key on the front panel.

Window allows the user to select the current window setting for fault detection in an LNA / LNB redundant system. The possible selections are: “8%”, “12%”, “15%”, and “20%” of the nominal operating DC bias current. The factory default setting is 12%.

Buzzer allows the user to enable or disable the internal audible alarm. The factory default setting is enabled.

3.3.1.4 Sys Info - Page 4

This page pertains to the advanced system diagnostic features of the RCP controller.

LNA/LNB Faults refers to the controlled state of the LNA/LNB system. This item shows the fault state of the individual LNAs/LNBs. If no faults are detected, the word "None" will be displayed. If fault tracking isn't enabled (e.g., if the Track setting is set to Ext – External faults only), the state will be indicated as "N/A" – Not Available. If any LNA related faults are present in the system, this item will show them in format X-X-X, where X could be the number 1, 2 or 3. For example, if LNA1 is in a fault condition, the display will indicate "1----"; if all three LNAs are faulted, "1-2-3" will be displayed.

SSPA Faults refers to the controlled state of the SSPA system. This item shows the fault state of each individual SSPA. If no faults are detected, the word "None" will be displayed. If fault tracking isn't enabled (e.g., if the Track setting is set to LNA – LNA/LNB faults only), the state will be indicated as "N/A" – Not Available. If any SSPA faults are present in the system, this item will show them in format X-X-X, where X could be the number 1, 2 or 3. For example: if SSPA1 is in the fault condition, the display will indicate "1----"; if all three SSPAs are faulted, "1-2-3" will be displayed.

PS1Out(V) indicates the output voltage of the controller's internal power supply 1. The
indicated value shows an instant reading of the power supply voltage with accuracy of 0.1V. Normally, this value should be in a range from 22V to 27V.

PS2Out(V) indicates the output voltage of the controller's internal power supply 2. The indicated value shows instant reading of the power supply voltage with accuracy of 0.1V. Normally, this value should be in range from 22V to 27V.

3.3.1.5 Sys Info - Page 5

This page pertains to the advanced system diagnostic features of the controller

Unit1; Unit2; Unit3 – Items refer to the summary fault state of individual units attached to the RCP. The possible state is "Normal" for non-fault condition, "Fault" or "N/A" as not available.

Ux Standby refers to the selected default standby unit. “x” can be a digit from 1 to 3 and indicates which unit was selected as the default standby unit. This unit is usually selected by the user in the initial RCP setup. The selected unit will remain on standby under RCP **Manual** mode, or when in **Auto** mode when all units are in “Normal” non-faulted condition). Under **Auto** mode, the default standby unit will be put online if required. Under **Auto** mode, the RCP always keeps track of the unit’s reliability record and can reassign default standby state to the unit with the worst reliability record. The unit will be assigned automatically to the default standby state if its fault state was switched from “Normal” to “Fault” more then two times since the last user intervention. Any user intervention to the units standby setup will clear all reliability records.

3.3.1.6 Sys Info - Page 6

This page provides additional system information (firmware version 3.7.0 or better).

System Mode (SysMode) provides information regarding the current controller operation mode and switching logic. Indicated status: “1:1” for 1:1 Mode; “1:2” for 1:2 Mode; “1:1 Ph. Combine” for 1:1 Phase Combined Mode; “Dual 1:1” for Dual 1:1 Mode; “Single Sw” for Single Switch Mode; or “1:2 Ph. Combine” for 1:2 Phase Combined Mode. See **Section 3.3.3.1**.

Unit Temp displays the controller card temperature in degrees Celsius. (Version 6.00).

Standby Mode (StdbyMode) shows the operational mode of the standby amplifier. In “Hot” mode, when the amplifier is in standby mode, it is transmitting its signal to the dummy load. If the standby amplifier is switched to the online state, full output power is immediately available. In “Cold” mode, when the amplifier is in standby mode, it is muted. If the standby amplifier is switched to the online state, it will unmute and will take several moments to achieve full output power. (Version 6.00).

LastFault displays the cause of the last fault identified by the controller. Possible results include: AuxFlt (Auxiliary Fault); ColdSt (unit cold start power-up detected); HPAFlt (HPA Fault); LNAFlt (LNA/LNB fault); PSFlt (Power Supply fault); Other (unknown fault condition); or None (no information about present/past fault conditions, such as after the Clear Faults function is implemented by the user).

3.3.1.7 Sys Info - Page 7

AuxIn# presents the detected logic state of the Auxiliary Input for each connected unit. Possible values include: “Hi” for logic high state; or “Lo” for logic low state.

AuxState shows the state of the Auxiliary Fault based on the Auxiliary Fault Input and selected Auxiliary Fault Logic. The following statuses are valid: “Normal”, “Fault” or “N/A”.

AuxLogic shows the selected logic used to handle Auxiliary faults. Valid returns include: Enabled, Disabled, Invert, Switch, and Sw Invert. See **Section 3.3.4.2**.

3.3.1.8 SSPA Subsystem Information - Pages 1-5

Page 1: Lists conditions and settings common to all SSPAs in a subsystem.
Page 2: Displays individual SSPA output power levels.
Page 3: Shows individual SSPA core temperatures and ambient temperature.
Page 4: Lists SSPA DC current consumption.
Page 5: Presents additional subsystem settings, including system type, switch mute setting and individual unit attenuation offsets.

See **Section 4.6** for a thorough description of this series of menus.

3.3.1.9 IP Info - Page 1

This page is available through the ComSetup menu, and shows settings related to the IP interface. See **Figure 3-5**.

IP Address: IP address of the RCP . Consult your network administrator to set this address according to your LAN configuration.
MAC: Medium Access Control address of the RCP Ethernet controller. This address is factory preset.
Subnet: IP subnet mask of the RCP. Consult your network administrator to set this address.
IPPort: IP port value for the RCP. This address is valid only when IPNet protocol is selected. The port value should not be selected outside the existing services range to avoid access conflict on the M&C PC end.

3.3.1.10 IP Info - Page 2

This page shows RCP settings related to the IP interface.

Gateway: IP Gateway address. This address is used only if access to the RCP is provided from an outside LAN. If no such access is required, the address must be set to 0.0.0.0
LockIP: This address is used to increase the security measure for the IPNet protocol. The RCP will answer a request which comes only from a specified IP address. To disable this feature, set this address value to 255.255.255.255. See **Section 3.3.2.5** for details.

3.3.1.11 IP Info - Page 3

This page shows RCP settings related to the IP interface.

- **CommunityGet**: Security string used in SNMP protocol for Get type requests. Set this value to match the value specified in the NMS or MIB browser. Maximum string length is 20 alpha-numeric characters. The string allows read operation for the RM SSPA SNMP agent.
- **CommunitySet**: Security string used in SNMP protocol for Set type requests. Set this value to match the value specified in the NMS or MIB browser. For security reasons this string must be different than the Community Get string. Maximum string length is 20 alpha-numeric characters. The string allows write operation for the RM SSPA SNMP agent.

Community strings are essentially passwords. The user should use the same rules for selecting them as for any other passwords: no dictionary words, spouse names, etc. An alphanumeric string with mixed upper- and lower-case letters is generally a good idea.

3.3.1.12 IP Info - Page 4

This page contains information about the web password and Trap NMSIP.

- **WebPassword** — Displays the password for the web page interface.
- **TrapNMSIP** — Shows the selected IP address for the SNMP trap recipient. (Version 6.00).

3.3.1.13 Firmware Info - Page 1 (ver. 6.00)

This page is available through the Operation Setup menu, and provides information about the SSPA micro-controller unit firmware revision level and build date.

3.3.1.14 Firmware Info - Page 2 (ver. 6.00)

This page provides additional RCP2 information.

- **DeviceID** – RCP2 unique serial and model number.
- **UserInfo** – User information string, which could be set over SNMP protocol (see SNMP MIB info for details)

3.3.1.15 Device Run Time Page (ver. 6.00)

This page displays how long the unit has been running, shown in the number of days, hours, minutes and seconds. A power cycle will reset this clock.

3.3.1.16 RCP2 Local Time Info Page (ver. 6.00)

This page shows the optional device clock. The device clock is a user-selectable parameter. User set time is power dependent; a backup capacitor is used to keep the clock running while the unit is powered down. The clock will needed to be set again if the unit remains without power for longer than 5 hours.

The clock output format as follows: Year/Month/Day Hours:Minutes:Seconds. At this time, only the 24-hour clock format is supported.

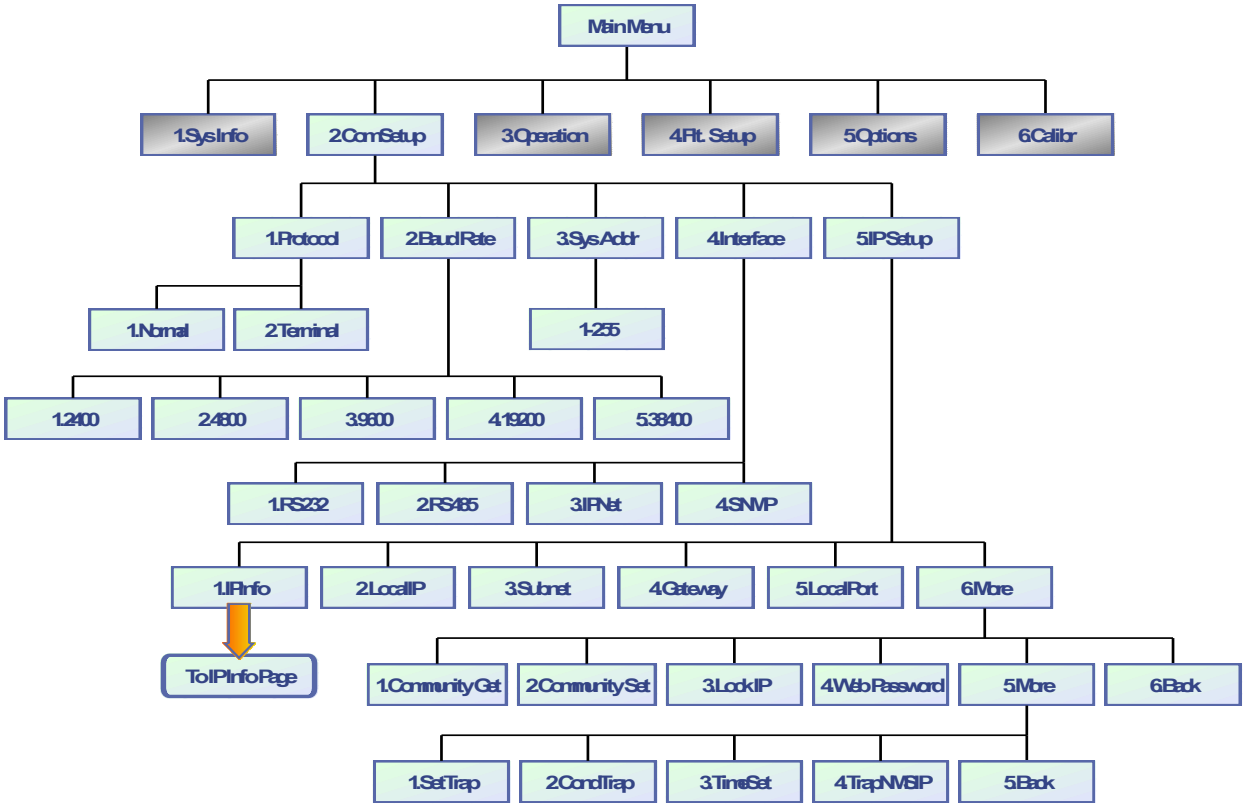

Figure 3-6: Serial Communication Parameters Menu

3.3.2 Serial Communication Parameters

This section describes the serial communication parameters that can be selected for the controller. Press the **Main Menu** key; select **2.ComSetup** and press the **Enter** key. See **Figure 3-6**.

Changes in Serial Communication settings from the front panel are effective immediately. Changes to these parameters from the serial interface require that the controller be reset in order to take effect. The controller can be reset either by cycling power to the unit or by selecting the reset option on the front panel menu (see **Section 3.3.5.5**).

3.3.2.1 Protocol

This menu selection allows the user ability to select between the following protocols:

Normal - Selects only the Paradise Datacom protocol
Terminal - Selects only the terminal protocol. See **Appendix A** for more info.

3.3.2.2 Baud Rate

Selects the desired Baud Rate to use for serial communication. Valid options are: 2400, 4800, 9600, 19200 and 38400.

3.3.2.3 Sys. Address

Sets the network address of the controller if used in a RS485 network. Address is selectable from 1 to 255

3.3.2.4 Interface

This menu choice provides the selection of the physical interface of the main serial port. Choose between RS-232, RS-485, IPNet (Ethernet) and SNMP interfaces.

Starting with Firmware version 6.00, the RCP controller allow simultaneous support of multiple remote control interfaces. Refer to **Section 7** for more details.

3.3.2.5 IP Setup

This menu allows the user to select between the following menu items:

- **1.IPInfo** - This selection allows the user to review all IPNet settings as described in **Section 3.3.1.8** through **Section 3.3.1.11**.
- **2.Local IP** - This selection allows the user to set the unit's Local IP Address. Factory default for standalone units is 192.168.0.9.
- **3.Subnet Mask** - This selection allows the user to set the unit's Subnet Mask. Factory default is 255.255.255.0.
- **4.Default Gateway** - This selection allows the user to set the unit's Default Gateway. Factory default is 192.168.0.1.
- **5.Local Port** - This selection allows the user to set the unit's Local Port. The default Local Port address is 1007.
- **6.More** - This selection opens the menu items listed in **Section 3.3.2.5.1**.

3.3.2.5.1 More (SNMP, IP and Web Settings)

This menu allows the user to set the Community String Selection (Set/Get) and assign the Web Password.

Use the **Up Arrow** [▲] and **Down Arrow** [▼] keys to browse through selected characters. Press the **Up Arrow** [▲] and **Down Arrow** [▼] keys simultaneously to erase the selected character. Press the **Left Arrow** [◄] and **Right Arrow** [►] keys to navigate within the string. Maximum length is 20 characters.

- **1.Community Get** — This selection allows user to set the SNMP Community Get String. Default is "public";
- **2.Community Set** — This selection allows user to set the SNMP Community Set String. Default is "private";
- **3.LockIP** — This selection allows user to set the IP address from which requests will be accepted by the amplifier. The LockIP selection gives the user the ability to increase the security measure for the IPNet protocol. The SSPA will answer a request which comes only from the assigned IP

address. For firmware prior to version 6.00, set this address value to 0.0.0.0 or 255.255.255.255 to disable this feature.
Starting with version 6.00, the Lock IP address function has been updated to allow “Binding” and “Masking” functions. Binding" means that the first datagram retrieved for this socket will bind to the source IP address and port number. Once binding has been completed, the SSPA will answer to the bound IP source until the unit is restarted or reset. Without binding, the socket accepts datagrams from all source IP addresses. Address 0.0.0.0 allows all peers, but provides binding to first detected IP source; Address 255.255.255.255 accepts all peers, without binding. If Lock IP is a multicast address, then the amplifier will accept queries sent from any IP address of multicast group;

- **4.WebPassword** — This selection allows the user to set the password for the web interface. Default is “paradise”. Erase all characters to disable password protection;
- **5.More** — This selection opens the menu items listed in **Section 3.3.2.5.2**.
- **6.Back** — This selection opens the menu items listed in **Section 3.3.2.5**.

3.3.2.5.2 More (Traps and Time Settings)

This menu allows the user to set SNMP Trap settings, and also set the time of the internal clock.

- **1.SetTrap** — This selection allows the user to set the Settings Trap;
- **2.CondTrap** — This selection allows the user to set the Conditions Trap;
- **3.TimeSet** — This selection allows the user to set the time. Clock output format is YY/MM/DD HH:mm. Only 24-Hour format is supported at this time. Press the **Up Arrow** [▲] key to increment the value highlighted by the cursor. Press the **Down Arrow** [▼] key to decrease the value highlighted by the cursor. Press the **Right Arrow** [►] key to move the cursor to the right; Press the **Left Arrow** [◄] key to move the cursor to the left; Press the **Enter** key to save the current setting.
- **4.TrapNMSIP** — This selection allows the user to set the Trap NMS IP Address;
- **5.Back** — This selection opens the menu items listed in **Section 3.3.2.5.1**.

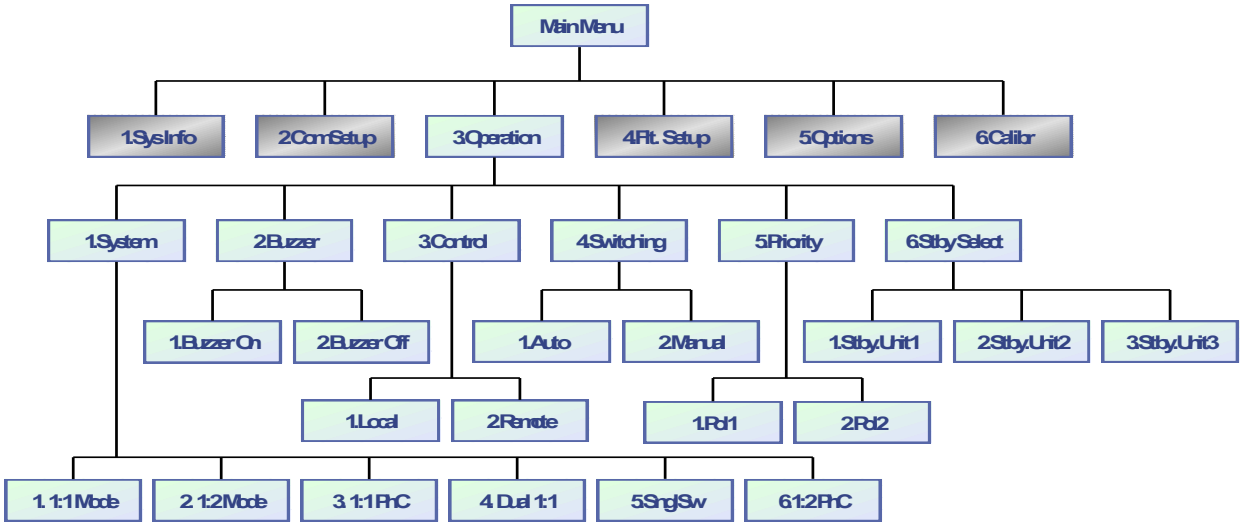

Figure 3-7: Operation Parameters Menu

3.3.3 Operations Menu

This section describes the basic setup parameters of the redundant controller. The operation parameters can be accessed from the main menu. Press the **Main Menu** key; select **3.Operation** and press the **Enter** key. See **Figure 3-7**.

3.3.3.1 System

Selects the logical state machine used by the controller. Available choices are “1:1 Mode”, for 1:1 redundant systems; “1:2 Mode”, for 1:2 redundant systems, “1:1 PhC “, for 1:1 phase combined systems; “Dual 1:1”, for dual 1:1 redundant systems; “SingleSw”, for systems employing a single switch, such as a maintenance switch; and “1:2 PhC”, for 1:2 phase combined systems.

3.3.3.2 Buzzer

Allows the user to enable or disable the audible alarm buzzer. The factory default is to have the buzzer enabled.

3.3.3.3 Control

Selects between Local and Remote mode. Note that this is the same function as the dedicated front panel **Local/Remote** key.

3.3.3.4 Switching

Selects between Auto and Manual mode. Note that this is the same function as the dedicated front panel **Auto/Manual** key.

3.3.3.5 Priority

Used in 1:2 redundant systems only. It is used to assign switching priority to either position 1 or position 3 in the event that both amplifiers fail. Priority has no effect in a FPRC-1200 system.

3.3.3.6 Stby. Select

Selects which unit will be in default standby mode. Note that this is the same function as on the signal path mimic display on the front panel.

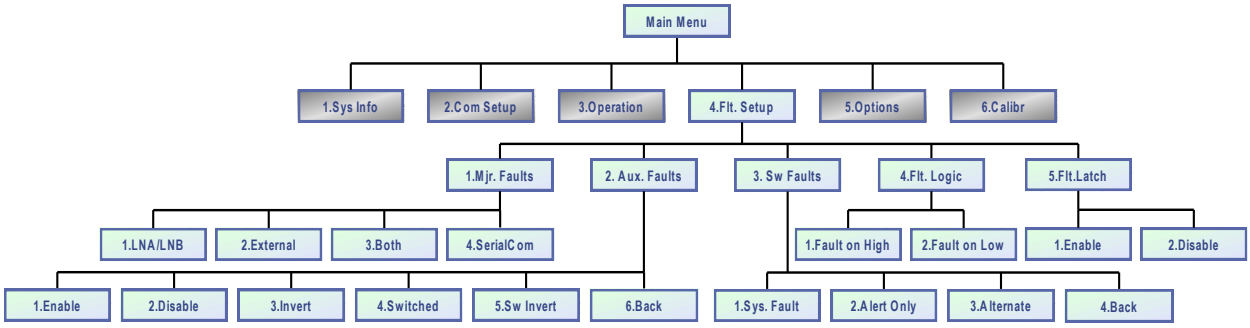

Figure 3-8: Fault Setup Parameters Menu

3.3.4 Fault Setup

This section describes the fault tracking capability of the controller. The controller is extremely versatile in its ability to monitor alarms from a variety and quantity of equipment. The following alarm inputs are provided on the controller:

- LNA / LNB Current Monitoring - up to 600mA
- (3) External Alarm Inputs
- (5) Auxiliary Alarm Inputs

Any combination of the alarm inputs can be used individually or together.

Press the **Main Menu** key; select **4.Flt.Setup** and press the **Enter** key. See **Figure 3-8**.

3.3.4.1 Mjr.Faults

Allows the operator to assign priority and select those inputs that constitute a major fault and cause switchover. Normally, only External fault tracking is enabled in a FPRC -1200 System.

- **1.LNA/LNB** - Enables the current monitoring of LNA/LNB to create major fault alarm
- **2.External** - Enables the (3) external alarm inputs of J8
- **3.Both** - Allows both current monitoring and external alarms to create a major fault.
- **4.SerialCom** - Allows tracking of a connected HPA fault state by reading incoming data over the local control port. This option can be used in conjunction with the selected HPA subsystem in case the external alarm port is out of service.

3.3.4.2 Aux.Faults

Allows the operator to select fault handling of the (5) auxiliary fault inputs of J8 to create a major fault. Select one of the items listed below and press the **Enter** key to enable.

- **1.Disable** – Auxiliary faults disabled;
- **2.Enable** – Enables independent auxiliary fault function. Fault inputs will not be paired with main fault input channels and will not cause unit faults or switchover of the RCP2 unit. Fault logic follows major fault logic;
- **3.Invert** – Enable independent auxiliary fault function. Fault inputs will not be paired with main fault input channels and will not cause unit faults or switchover of the RCP2 unit. Fault logic inverted from major fault logic;
- **4.Switched** – Auxiliary fault enabled as chain redundancy indicator for HPA faults. Each Auxiliary channel will be paired up with the main fault channel. A detected auxiliary fault will be treated as a fault on the main fault channel and will lead to a relevant unit fault. Fault logic follows major fault logic;
- **5.Sw Invert** – Auxiliary fault enabled as chain redundancy indicator for HPA faults. Each Auxiliary channel will be paired up with the main fault channel. A detected auxiliary fault will be treated as a fault on the main fault channel and will lead to a relevant unit fault. Fault logic is inverted from major fault logic.
- **6.Back —** Select and press the **Enter** key to return to the Fault Setup menu of **Section 3.3.4**.

3.3.4.3 Sw.Faults

Determines whether a switch fault should cause a major alarm and attempt to switch or simply alert to the problem on the front panel VFD (considered a minor alarm). Select one of the items listed below and press the **Enter** key to enable.

- **1.Sys.Fault** - Major Alarm Mode, Summary alarm and switchover triggered.
- **2.Alert** - Minor Alarm Mode, No summary alarm indicated; no switchover occurs.
- **3.Alternate** – Same as Alert, but will alternate functions of the parallel I/O port output for the Switch position indicator form C-relays. Instead of indicating position (either Pos1 or Pos2), relays will indicate RF switch fault or normal status. This option was introduced in RCP firmware rev 3.30 for advanced system integration purposes. This option should not be selected by the customer unless advised by Teledyne Paradise Datacom LLC.
- **4.Back** — Select and press the **Enter** key to return to the Fault Setup menu of **Section 3.3.4**.

3.3.4.4 Fault Logic

Select between “Fault on High” and “Fault on Low”.

3.3.4.5 Fault Latch

Determines the alarm reporting condition. A latched alarm will remain indicated on the front panel until the operator clears the alarm by pressing the “Enter” button. Unlatched alarms will allow the summary alarm indicator to stop displaying the alarm condition if the circumstance creating the alarm has be cleared or corrected.

- **1.Enable** - Keeps alarm condition displayed until operator intervention.
- **2.Disable** - Unlatches the Alarm state

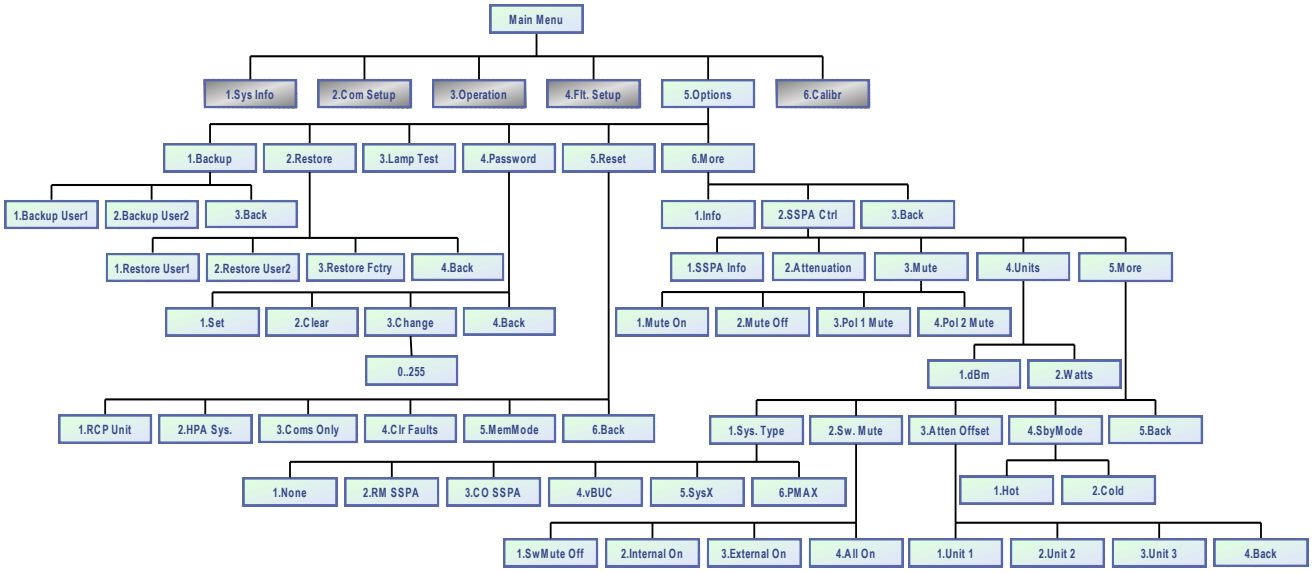

Figure 3-9: Options Parameters Menu

3.3.5 Options Menu

This section describes the features available on the Options menu of the controller. The operation parameters can be accessed from the VFD menu. Press the **Main Menu** key; select **5.Options** and press the **Enter** key. See **Figure 3-9**.

3.3.5.1 Backup

Allows the operator to back up all settings to nonvolatile memory. There are two repositories for saved settings. Menu selections include:

- **1.Backup User1** — Select to save current settings to User1 repository;
- **2.Backup User2** — Select to save current settings to User2 repository;
- **3.Back** — Returns to Options Sub-Menu (**Section 3.3.5**).

3.3.5.2 Restore

Allows the user to restore saved settings from a previous backup or factory pre-set. Menu selections include:

- **1.Restore User1** — Select to restore settings saved in User1 backup;
- **2.Restore User2** — Select to restore settings saved in User2 backup;
- **3.Restore Fctry** — Select this item to restore factory default settings;
- **4.Back** — Returns to Options Sub-Menu (**Section 3.3.5**).

3.3.5.3 Lamp Test

Tests all front panel LEDs. The LEDs remain on until the "**Enter**" key is pressed.

3.3.5.4 Password

Allows the user to set, clear, or change a password that prohibits others from changing controller settings. Menu selections include:

- **1.Set** — Enables password protection. Uses last saved number from 1-255;
- **2.Clear** — Disables password protection;
- **3.Change** — Allows user to define the password. A number from 1-255 can be selected. Use the front panel navigation keys to set the number. The **Up Arrow** (▲) and **Down Arrow** (▼) keys change the number by factors of 10. The **Left Arrow** (◄) and **Right Arrow** (►) keys change the number in increments of 1; Press the **Enter** key to accept the new password.
- **4.Back** — Returns to the Options Sub-Menu (**Section 3.3.5**).

3.3.5.5 Reset

Allows the user to reset the controller hardware to activate certain settings. For example, when the IP Address is modified the unit must be reset for it to use the new IP Address.

Firmware version 6.00 allows multiple reset levels for the unit:

- **1.RCP Unit** — Resets all hardware on the removable M&C card of the unit. All communication links to remote M&C will be dropped until reset process is complete. The unit will start up using currently selected communication parameters (IP address, baud rate, etc). Command of a remote HPA system will not reset. However, power supplied by the unit to LNAs/LNBs will be turned off during reset and turned back on after reset is completed;
- **2.HPA Sys.** — Sends full reset command to remote control HPA system
- **3.Coms only** — Resets only communication parameters. Remote COM and IP links will be dropped and re-enabled with currently selected parameters;
- **4.ClrFaults** — Clears all latched faults and remaining fault history information. Unit remains fully operational during the process;
- **5.MemMode** — Allows alternate settings retention function. Two choices are allowed:
  - **FLASH** — Default mode. Without user intervention, the unit will retain this mode of operation. All changes to settings setup performed over local or remote interface will be backed up to EEPROM within 3 seconds. If the unit experiences a power cycle or reset, the last saved set of settings will be applied to the unit upon each power up or I/O card reset. Any EEPROM device has a limited ability to endure write cycles. Maximum write cycles for units with firmware version prior to 6.00 is 150,000 times. After exceeding this limit, the unit will operate in RAM mode, utilizing a default set of settings on each power up. Firmware version above 6.00 allows a minimum of 3,000,000 write cycles before opting out to RAM mode;

- **RAM** — In this mode, the unit will not backup any settings changes to internal EEPROM. This mode is optional and needs to be set by the user every time when the unit endures a power cycle or I/O card reset. This mode is beneficial when frequent changes are necessary to the unit state (such as mute/unmute or attenuation changes). Since any EEPROM device has limited write cycles, RAM mode allows the user to execute unlimited settings changes. If the unit experiences a power or reset cycle in RAM mode, it will use the last saved settings setup before RAM was engaged;

3.3.5.6 More

This allows access to the menus described in **Sections 3.3.5.7**, **3.3.5.8** and **3.3.5.9**.

3.3.5.7 Info

Provides access to the record of the firmware type, version and build date, as well as the device ID and run time. See **Figure 3-5** (SysID Firmware Info Menu).

3.3.5.8 SSPA Ctrl

This section deals with settings specific to SSPA systems.

- **1.SSPA Info** – Provides access to the record of SSPA attenuation, mute status, forward and reflected power, individual SSPA output power, ambient and SSPA core temperatures, SSPA current draw and other system information. See **Figure 3-5** (System Setup Menu).
- **2.Attenuation** – Allows the operator to vary the gain of the SSPA system from its maximum value to 20 dB below its maximum value. Use the **Left Arrow** (◄) and **Right Arrow** (►) keys to move the cursor; use the **Up Arrow** (▲) key to increase the numerical value at the cursor; use the **Down Arrow** (▼) key to decrease the numerical value at the cursor. Press the **Enter** key to accept the entered value.
- **3.Mute** – Select the SSPA mute function: 1.Mute On; 2.Mute Off; 3.Pol1 Mute (1:2 Only); 4.Pol2 Mute (1:2 Only) (see **Section 4.5.2.1**).
- **4.Units** – Select either 1.dBm or 2.Watts as the display unit.
- **5.More** – This selection gives access to the following menu items:
  - **1.Sys.Type (System Type)** – Select the controlled system type: 1.None, 2.RM (Rack Mount) SSPA, 3.CO (Compact Outdoor) SSPA, 4.vBUC, 5.SystemX (for custom systems), or 6.PMAX (PowerMAX).
  - **2.Sw.Mute (Switch Mute)**– Select the switch mute option for the redundant system: 1.SWMute Off; 2.Internal On; 3.External On; 4.All On. See **Section 4.5.2.3** for details.
  - **3.Atten.Offset (Attenuation Offsets)** – Allows the operator to equalize the individual SSPA gain differential. The selected offset is added to the current level of system attenuation. The sum of the selected system attenuation and the offset setting is limited to 20 dB maximum.

- **4.SbyMode (Standby Mode)** – (Version 6.00). Select either **1.Hot Standby** or **2.Cold Standby**. In Hot Standby mode, standby (offline) amplifier remains fully functional. It is transmitting output signal to the dummy load. Since the HPA is already fully operational there is no warm up period. In Hot Standby mode, full output power is immediately available with highest possible gain stability. In Cold Standby mode, the offline unit is placed in a muted state. This mode of operation minimizes power consumption and slightly improves overall unit MTBF. When the unit is placed online, it will be unmuted automatically. Once switched to the online state, the unit will be subject to warm up and temperature equalization transition its gain may fluctuate slightly (within specified range). Cold standby typically is not used in systems where maximum gain/output power stability is required.
- **5.Back** — Returns to the SSPA Ctrl Sub-Menu (**Section 3.3.5.8**).

3.3.5.9 Back

Returns to the Options Sub-Menu (**Section 3.3.5**).

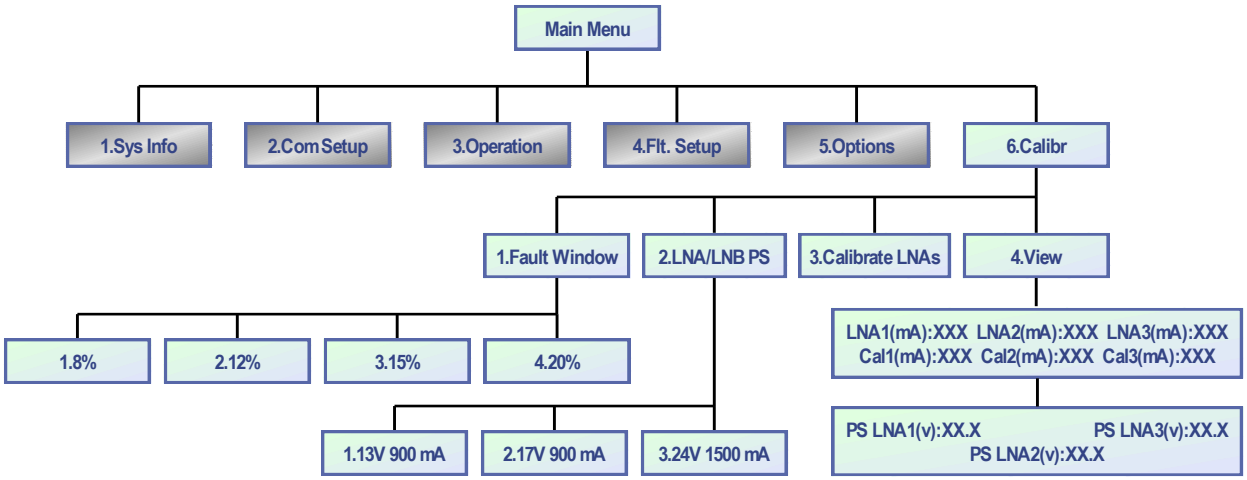

Figure 3-10: Calibration Parameters Menu

3.3.6 Calibration Menu

The following menu selections allow for calibration of the LNA/LNBs. See **Figure 3-10**.

When the controller is set up to perform LNA/LNB Fault Tracking, the LNA or LNB nominal current should be calibrated from the controller.

Set the controller for LNA/LNB Fault Tracking. See **Section 3.3.4** and **Figure 3-8**.

1. Press the **Main Menu** key;
2. Select **4.Flt. Setup** and press the **Enter** key;
3. Select **1.Mjr. Faults** and press the **Enter** key;
4. Select **1.LNA/LNB** and press the **Enter** key.

3.3.6.1 Flt. Window

Allows the operator to select the sensitivity of the alarm detection. Select from four window settings (8%, 12%, 15% or 20%) which are a percentage of the total current being consumed by the LNA/LNB. The 8% setting is the most sensitive and 20% is the least sensitive. The factory default setting is 8%.

3.3.6.2 LNA/LNB PS

Selects between three output voltage ranges for LNA/LNB power supplies: 13V, 17V or 24V output. Maximum average output current in all voltage ranges is 0.9A. Peak current consumption can be up to 1.5A. Attempts to run a continuous 1.5A on a standard unit may be subject to temperature de-rating.

An optional high power (-HP) controller is available, which features AC power supply units with forced air cooling, and can output 1.5A per channel continuously with no temperature de-rating.

Warning! Some LNB models may not be compatible with 24V PS option. To avoid potential equipment damage, refer to LNB technical data before enabling this voltage range!

Multiple voltage option can be used to switch between bands of dual or triple band LNB units or to connect higher power converters. All three channels will switch output voltage simultaneously. For a detailed description of LNB/LNA power supplies, refer to **Section 5.0.1**.

3.3.6.3 Calibrate

Select and press the **Enter** key to calibrate the system LNAs at the current level.

3.3.6.4 View LNA

Allows the user to view information about the system LNAs.

The resulting window shows current draw values (in milliamps) and the calibration values for each LNA in the system. The display will show “N/A” for LNA3 if the system is configured as a 1:1 redundant system.

A secondary window, available by pressing the **Down Arrow** (▼) key, displays the Power Supply voltages for each LNA.

THIS PAGE LEFT INTENTIONALLY BLANK

4.0 Introduction

This section describes various redundant system setups utilizing features available with the Teledyne Paradise Datacom Redundant System Controller.

The controller allows monitor and control of all types of amplifiers, from Low Noise Amplifiers (LNAs), Low Noise Block Converters (LNBs), Solid State Power Amplifiers (SSPA), Solid State Power Amplifiers with Block Up Converters (SSPBs) or vBUC amplifiers.

4.1 Operation of 1:1 System with RCP2-1100

Figure 4-1 shows the basic block diagram of a 1:1 redundant system. In normal operation one of the Amplifiers, 1 or 2, is considered the on-line amplifier and the other is in standby. If a fault condition occurs in the on-line amplifier the standby unit can be switched into the circuit by moving the transfer switches on the input and output side of the amplifiers.

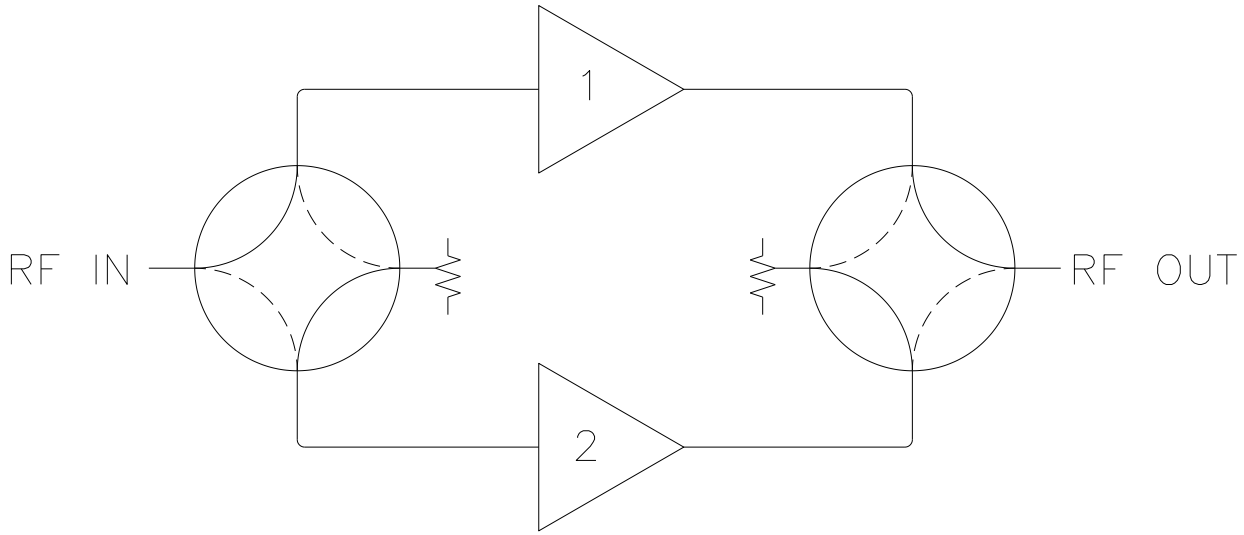

Figure 4-1: Block Diagram, 1:1 Redundant System

4.1.1 LNA / LNB 1:1 Redundant System Operation

This section covers the operation of the RCP2-1100 controller with a Teledyne Paradise Datacom LNA or LNB Redundant System. A typical LNA / LNB redundant system consists of an outdoor plate assembly, the RCP2-1100 indoor controller, and an interconnecting control cable. **Figure 4-2** shows the major components of a typical 1:1 LNA system.

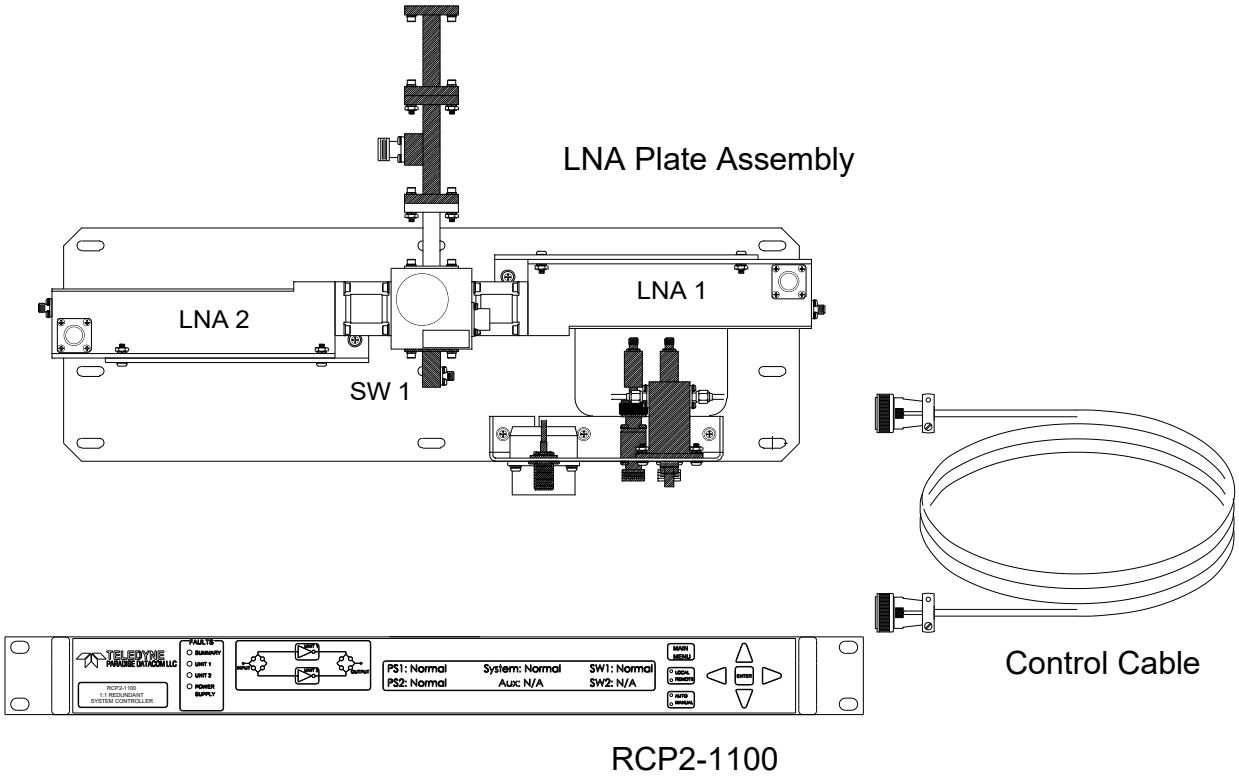

Figure 4-2: Indoor/Outdoor Components, 1:1 Redundant System

The LNAs or LNBs are powered by the RCP2-1100 Controller via the control cable. Two power supplies are included in the controller for total system redundancy. The power supplies are diode connected so that only one supply can operate the system.

The RCP2-1100 supplies +13/17/26 VDC to power the LNA / LNB and +26 VDC to operate the transfer switch. A failure in an LNA or LNB is typically noted by a change in the DC bias current. The RCP2-1100 has current window comparators that monitor the current drawn by each unit and will report a fault if the current falls outside of the preset current window. The nominal current and window width setting are factory preset to the particular LNA / LNB system, however both are easily adjustable via the front panel control. A typical 1:1 Redundant LNA system is shown in **Figure 4-3**.

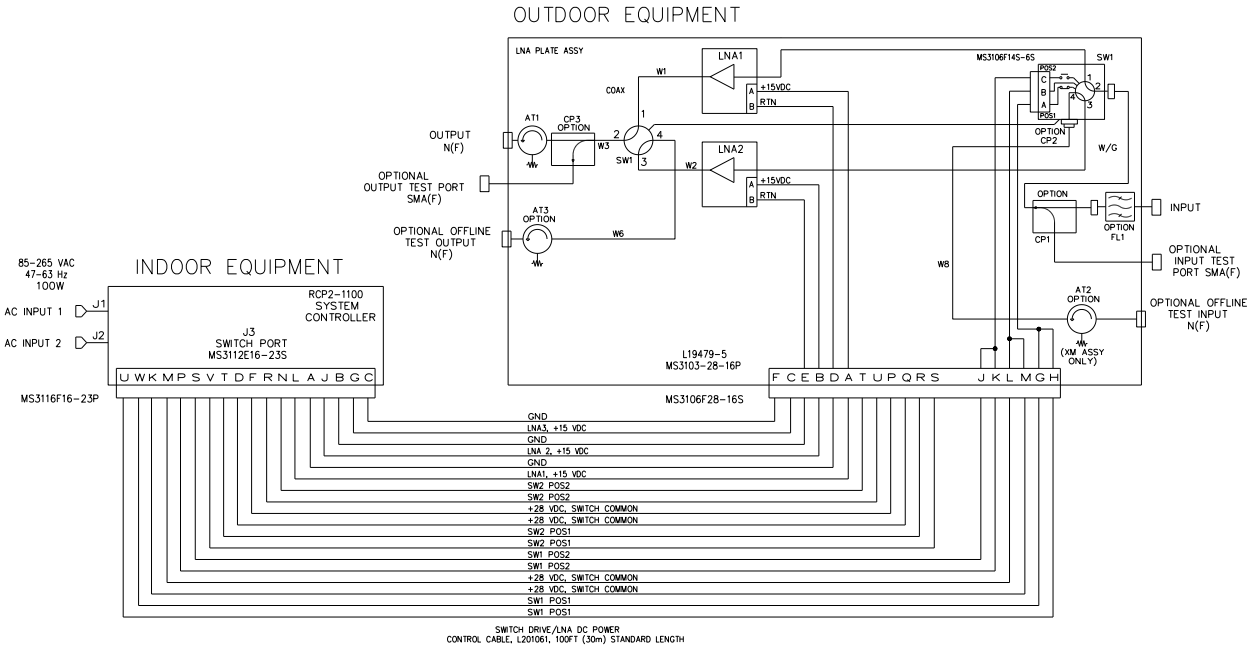

Figure 4-3: Typical Schematic, 1:1 Redundant LNA System

4.1.1.1 LNA/LNB Fault Tracking

To set up the RCP2-1100 for LNA/LNB fault tracking perform the following menu selections. Press the **Main Menu** key; select **4.Flt. Setup** and press the **Enter** key; select **1.Mjr. Faults** and press the Enter key; select **1.LNA/LNB** and press the **Enter** key. This puts the RCP2-1100 in LNA/LNB current monitor mode.

4.1.1.2 LNA / LNB Current Calibration

After the RCP2-1100 has been put in the LNA/LNB fault tracking mode, the LNA or LNB nominal current should be calibrated by the controller. To perform the current calibration, press the **Main Menu** key; select **6.Calibr** and press the **Enter** key; select **3.Calibrate** and press the **Enter** key. This calibrates the normal current consumption of the LNA/LNBs.

To select the sensitivity of the alarm detection, select **1.Flt.Window** and press the **Enter** key. Select from four window settings which represent a percentage of the total current being consumed by the LNA/LNB. The 8% setting is the most sensitive and 20% is the least sensitive. The factory default setting is 8%.

Note: Caution should be used when changing Fault Window settings from the factory preset. Current variations will occur in equipment naturally as a result of changes in operating temperature. Consideration should be given to environmental conditions and, in particular, to operating temperature extremes.

4.1.2 SSPA 1:1 Redundant System Operation

The RCP2-1100 can be configured to accept external fault inputs at connector J8. The external alarm inputs operate with a closure to ground input. The alarm inputs are opto -isolated inputs, exposing +5 VDC (open circuit voltage) at 5 mA maximum short circuit current. The external alarm inputs can be driven with an appropriate open collector device or relay contacts. Solid state power amplifier redundant systems typically use a form C relay summary alarm output to drive the RCP2 external alarm input. A schematic representation of such a system is shown in **Figure 4-4**.

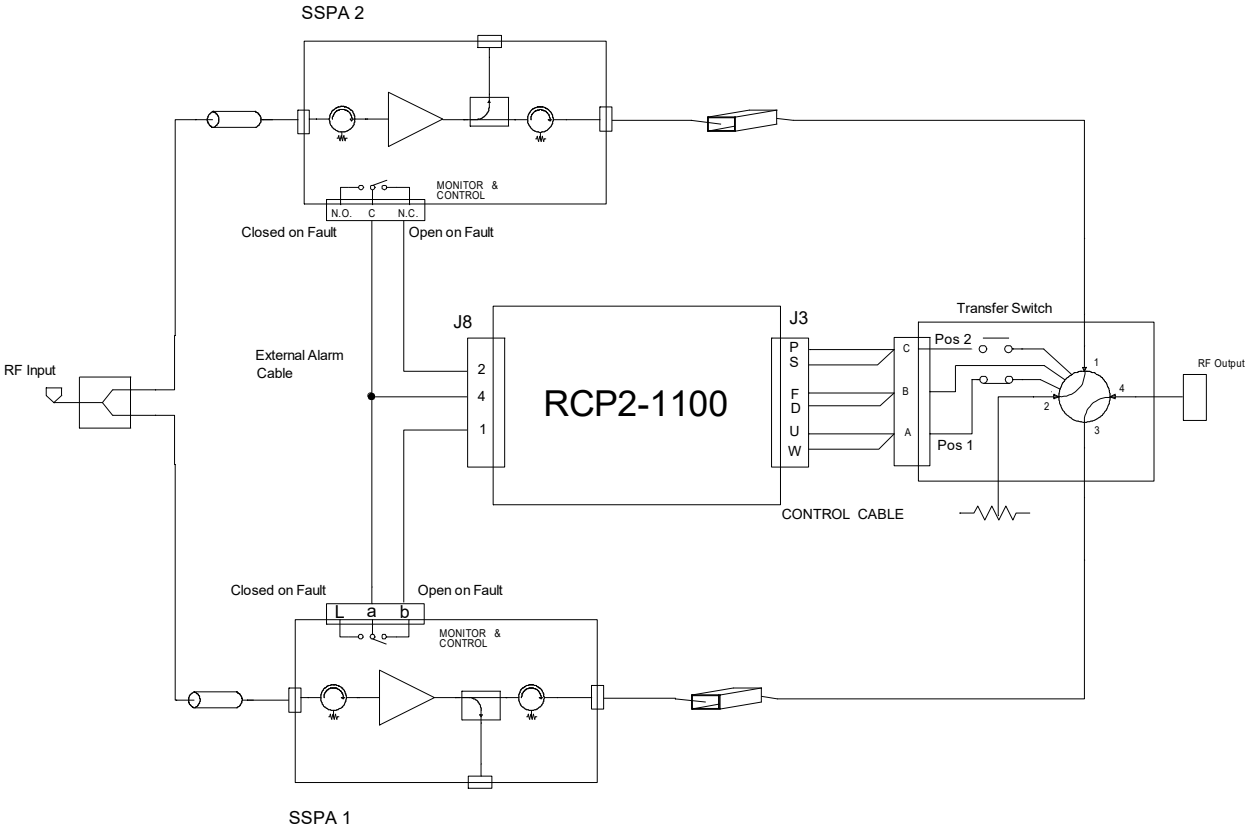

Figure 4-4: Schematic, Typical 1:1 Redundant SSPA System

The external alarm inputs are not limited to SSPA systems. Any device with the appropriate alarm output circuitry could be connected to the external alarm inputs.

To use the external alarm inputs on the RCP2-1100 they must first be enabled from the front panel using the following procedure.

4.1.2.1 External Alarm Tracking

Press the **Main Menu** key; select **4.Flt. Setup** and press the **Enter** key; select **1.Mjr. Faults** and press the **Enter** key; select **2.External** and press the **Enter** key. This puts the RCP2-1100 in external alarm monitor mode

4.2 Operation of 1:2 System with RCP2-1200

Figure 4-5 shows the basic block diagram of a 1:2 redundant system. In normal operation amplifiers 1 and 3 are considered the on-line amplifiers while amplifier 2 is in standby. If a fault conditions occurs in either one of the on-line amplifiers, the standby unit can be switched into the circuit by moving the transfer switches on the input and output side of the amplifiers. The amplifiers could be Low Noise Amplifiers (LNAs), Low Noise Block Converters (LNBs), Solid State Power Amplifiers (SSPA), or Solid State Power Amplifiers with Block Up Converters (SSPBs).

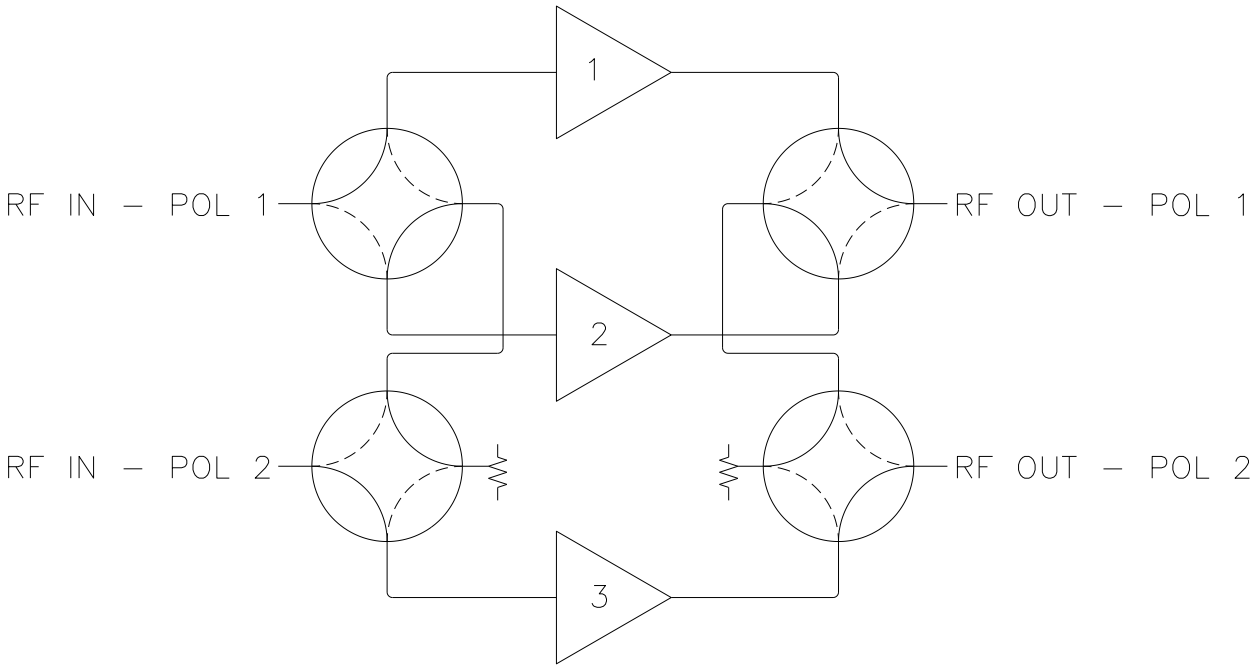

Figure 4-5: Block Diagram, 1:2 Redundant System

A priority can be assigned to either the Polarity 1 or Polarity 2 switch path in the event that both online amplifiers were to fail.

4.2.1 LNA / LNB 1:2 Redundant System Operation

This section covers the operation of the RCP2-1200 controller with a Paradise Datacom LNA or LNB Redundant System. A typical LNA / LNB redundant system consists of an outdoor plate assembly, the RCP2-1200 indoor controller, and an interconnecting control cable. **Figure 4-6** shows the major components of a typical 1:2 LNA system.

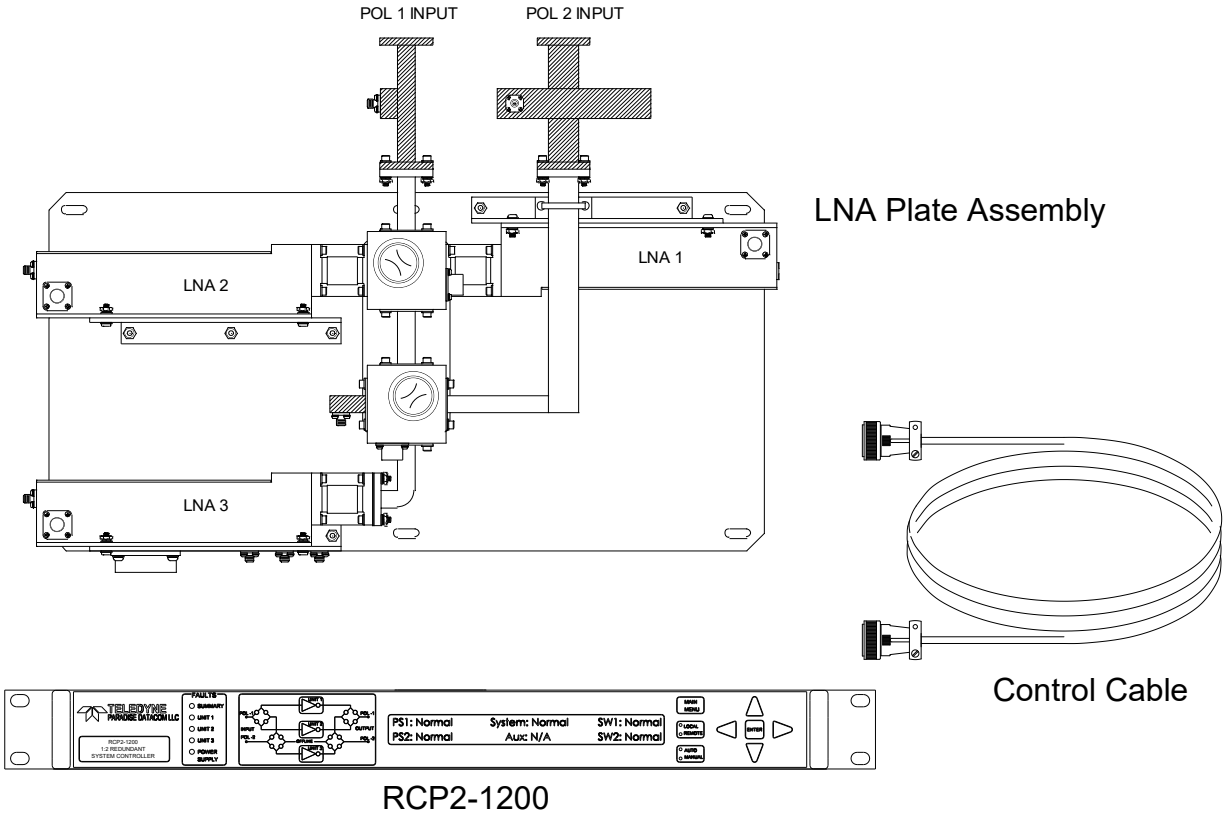

Figure 4-6: System Components, 1:2 Redundant LNA System

The LNAs or LNBs are powered by the RCP2-1200 Controller via the control cable. Two power supplies are included in the controller for total system redundancy. The power supplies are diode connected so that only one supply can operate the system.

The RCP2-1200 supplies +13/17/26 VDC to power the LNA / LNB and +26 VDC to operate the transfer switches.

The RCP2-1200 will keep track of the three independent LNA/LNB systems, keeping the link with the most failures in a given time offline. This is reset each time the user manually overrides the system by selecting one of the units from the front panel of the RCP2-1200.

A failure in an LNA or LNB is typically noted by a change in the DC bias current. The RCP2-1200 has current window comparators that monitor the current drawn by each unit and will report a fault if the current falls outside of the preset current window. The nominal current and window width setting are factory preset to the particular LNA / LNB system, however both are easily adjustable via the front panel control.

A typical 1:2 Redundant LNA System is shown in **Figure 4-7**.

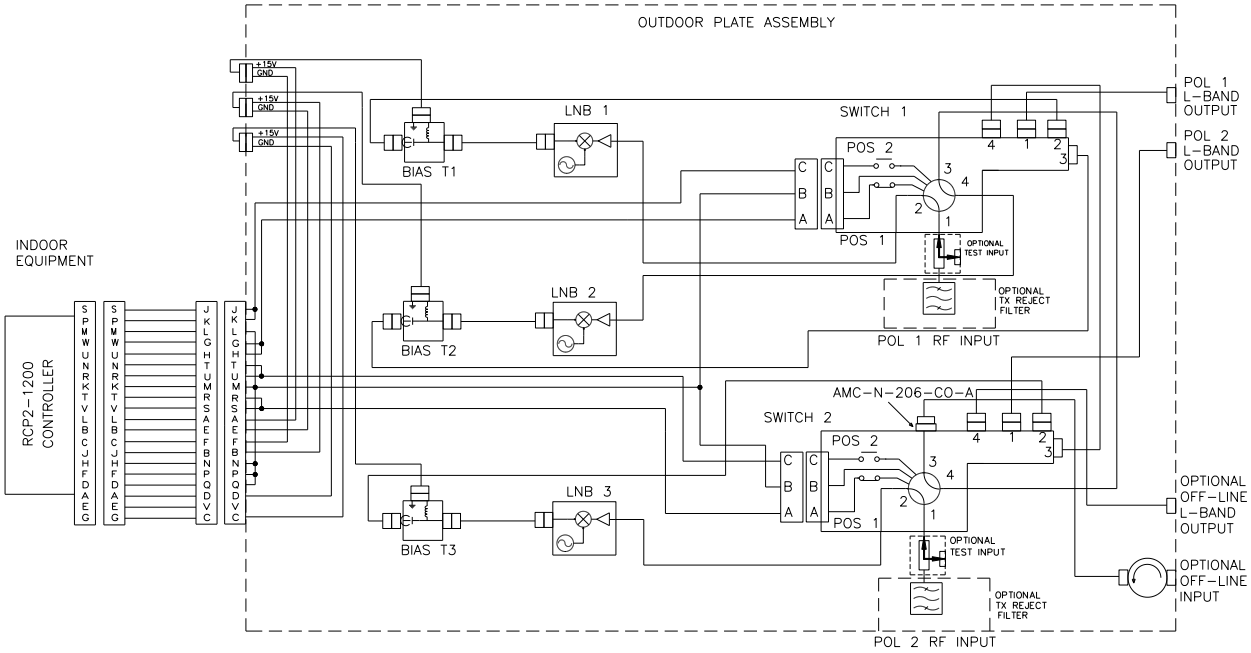

Figure 4-7: Schematic, Typical 1:2 Redundant LNA System

4.2.1.1 LNA/LNB Fault Tracking

To set up the RCP2-1200 for LNA/LNB fault tracking perform the following menu selections. Press the **Main Menu** key; select **4.Flt. Setup** and press the **Enter** key; select **1.Mjr. Faults** and press the **Enter** key; select **1.LNA/LNB** and press the **Enter** key. This puts the RCP2-1200 in LNA/LNB current monitor mode

4.2.1.2 LNA / LNB Current Calibration

After the RCP2-1100 has been put in the LNA/LNB fault tracking mode, the LNA or LNB nominal current should be calibrated by the controller. To perform the current calibration, press the **Main Menu** key; select **6.Calibr** and press the **Enter** key; select **3.Calibrate** and press the **Enter** key. This calibrates the normal current consumption of the LNA/LNBs.

To select the sensitivity of the alarm detection, select **1.Flt.Window** and press the **Enter** key. Select from four window settings which represent a percentage of the total current being consumed by the LNA/LNB. The 8% setting is the most sensitive and 20% is the least sensitive. The factory default setting is 8%.

Note: Caution should be used when changing Fault Window settings from the factory preset. Current variations will occur in equipment naturally as a result of changes in operating temperature. Consideration should be given to environmental conditions and, in particular, to operating temperature extremes.

4.2.2 SSPA 1:2 Redundant System Operation

The RCP2-1200 can be configured to accept external fault inputs at connector J8 (See **Section 2.4.6**). The external alarm inputs operate with a closure to ground input. The alarm inputs are opto-isolated inputs that expose +5 VDC, open circuit voltage, at 5 mA maximum short circuit current. The external alarm inputs can be driven by an appropriate open collector device or relay contacts. Redundant systems typically use a form C relay summary alarm output to drive the RCP2 external alarm input. A typical block diagram representation of such a system is shown in **Figure 4-8**.

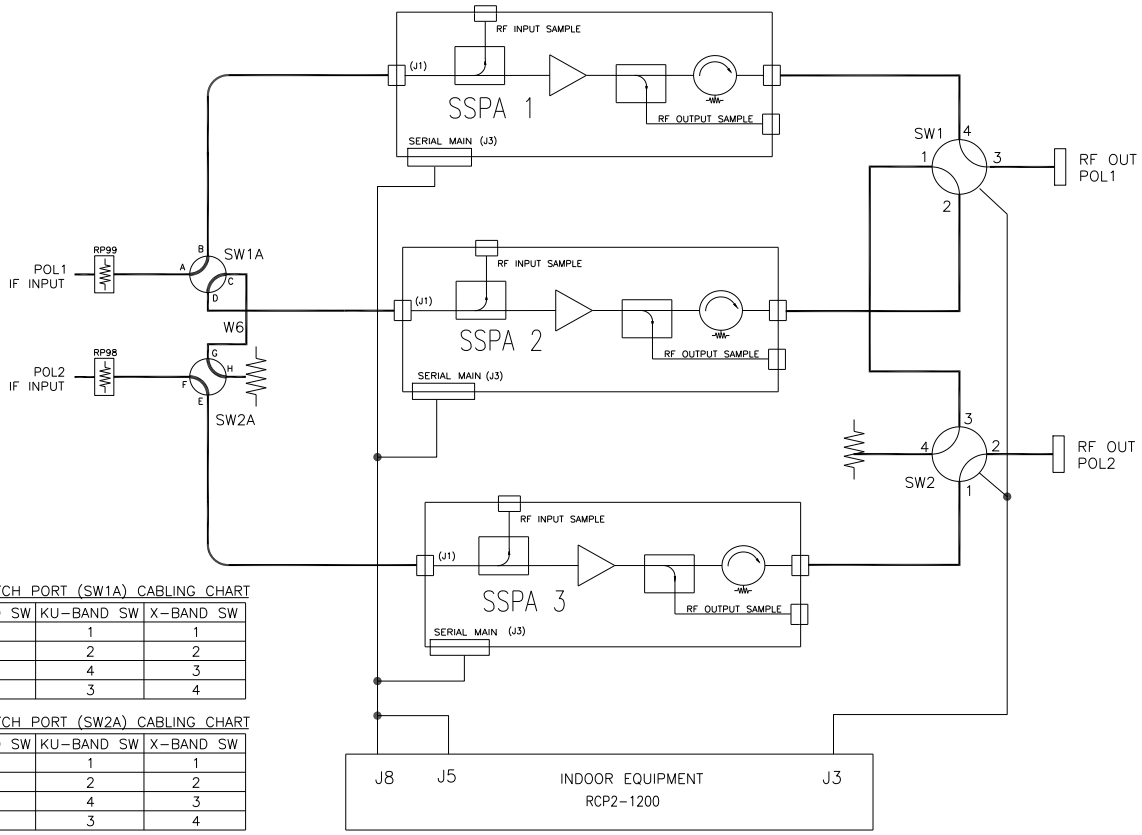

COAXIAL SWITCH PORT (SW1A) CABLING CHART

REF	C-BAND SW	KU-BAND SW	X-BAND SW
A	1	1	1
B	2	2	2
C	4	4	3
D	3	3	4

COAXIAL SWITCH PORT (SW2A) CABLING CHART

REF	C-BAND SW	KU-BAND SW	X-BAND SW
E	1	1	1
F	2	2	2
G	4	4	3
H	3	3	4

Figure 4-8: Block Diagram, 1:2 SSPA Redundant System

The external alarm inputs are not limited to SSPA systems. Any device with the appropriate alarm output circuitry could be connected to the external alarm inputs.

To use the external alarm inputs on the RCP2-1200 they must first be enabled from the front panel using the following procedure.

4.2.2.1 External Alarm Tracking

Press the **Main Menu** key; select **4.Flt. Setup** and press the **Enter** key; select **1.Mjr. Faults** and press the **Enter** key; select **2.External** and press the **Enter** key. This puts the RCP2-1100 in external alarm monitor mode.

4.3 Operation of 1:1 Fixed Phase Combined System with FPRC-1100

The 1:1 Fixed Phase Combined Redundant System is a popular system architecture that enables two Solid State Power Amplifiers to operate as a normal 1:1 redundant system or a phase combined system. The basic system topology is very similar to a 1:1 redundant system and is shown in **Figure 4-9**. An additional switch is included which allows either amplifier to be individually routed to the antenna or connect both amplifiers to a waveguide combiner. The combined system output power is then routed to the antenna. The operation is very similar to the older generation variable phase ratio combiner (VPRC) techniques.

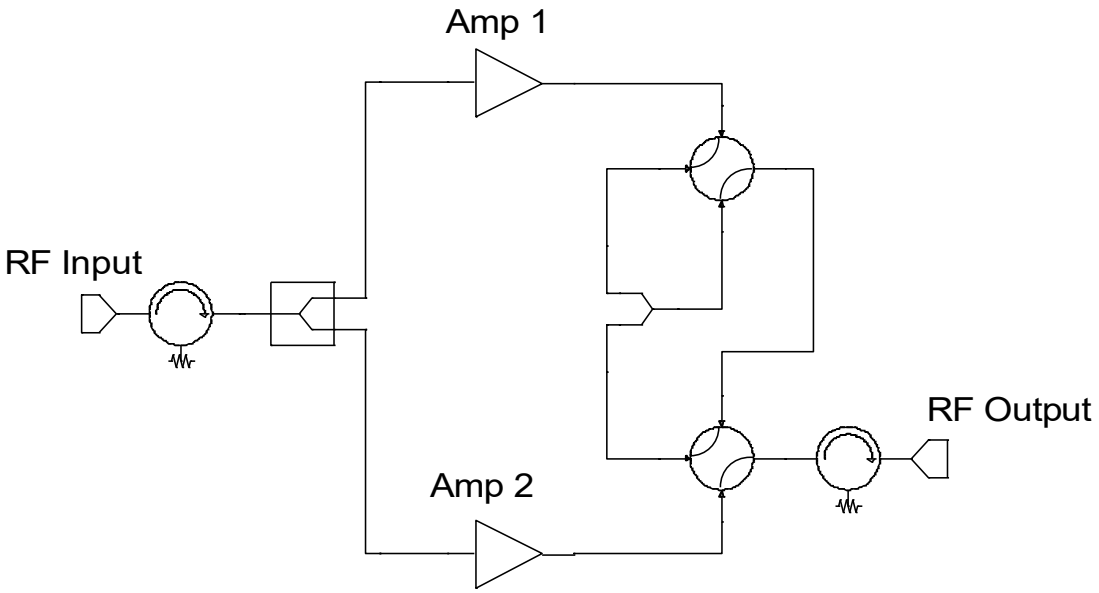

Figure 4-9: Block Diagram, 1:1 Fixed Phase Combined System

System designers find that the 1:1 Fixed Phase Combined Amplifier System topology is a cost effective solution to realizing higher power amplifier systems. For slightly more investment over a traditional 1:1 redundant system, the operator can have the capability of doubling the individual amplifier output power when conditions may require additional power. This is helpful when either atmospheric conditions require more power or if additional satellite traffic requires higher power capacity.

The FPRC-1100 controller is specifically designed to handle such an amplifier system. It not only handles all of the traditional fault monitoring and switching duties but also provides an overall system monitor and control facility. The FPRC-1100 can adjust the system gain over a 20 dB range without the need to adjust each of the amplifiers individually. It also provides a convenient display of the overall system output power. Individual amplifier monitor and control can all be achieved through the FPRC-1100 either locally via the front panel or by remote serial communication.

4.4 Operation of 1:2 Fixed Phase Combined System with FPRC-1200

The 1:2 Fixed Phase Combined Redundant System is a popular system architecture that enables Solid State Power Amplifiers to achieve higher output power levels while building in a level of redundancy. The basic system topology is similar to a 1:2 redundant system and is shown in **Figure 4-10**. Amplifiers #1 and #3 are normally online. The outputs of #1 and #3 are directed by the waveguide switches into a fixed phase combiner such as a waveguide “magic tee” style combiner. In the event of a failure of either on line amplifier, the standby amplifier, #2, can be switched in place of either #1 or #3 and the system maintains full output power.

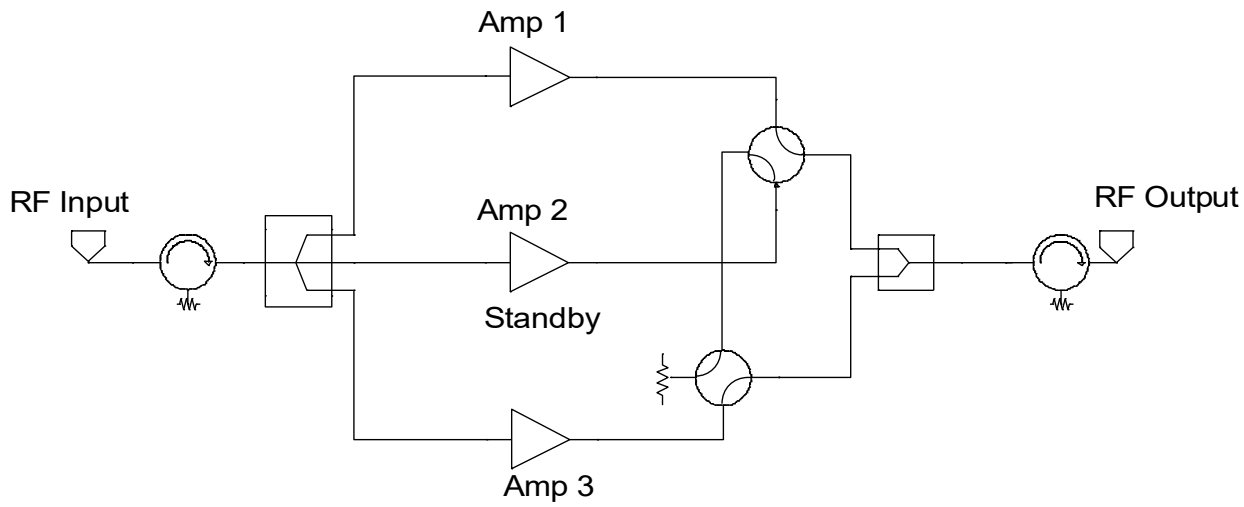

Figure 4-10: Block Diagram, 1:2 Fixed Phase Combined System

System designers find that the 1:2 Fixed Phase Combined Amplifier System topology is a very cost effective solution to realizing higher power amplifier systems. For example, it is less expensive to configure a 1 kW C-Band redundant system using (3) 500W Compact Outdoor Amplifiers in a 1:2 Fixed Phase Combined redundant system than it is to use (2) 1 kW amplifiers in a traditional 1:1 Redundant System.

The FPRC-1200 controller is specifically designed to handle such an amplifier system. It not only handles all traditional fault monitoring and switching duties but also provides an overall system monitor and control facility. The FPRC-1200 can adjust the system gain over a 20 dB range without the need to adjust each of the three amplifiers individually. It also provides a convenient display of the overall system output power. Individual amplifier monitor and control can also be achieved through the FPRC-1200 either locally via the front panel or by remote serial communication.

4.5 RCP Remote Control of System SSPAs

RCP units that meet certain conditions are capable of remote control of system SSPAs through the RCP Local Serial Port (J5).

> **Note:** The following features are supported only with firmware version 2.2.00 and above. To verify your unit firmware version browse to the SysID screen on the front panel. If the firmware version is below 2.2.00, the unit's firmware can be upgraded to the proper version by the user.

Systems may contain up to three amplifiers (consisting of the Teledyne Paradise Datacom Compact Outdoor, Rack Mount SSPAs, or vBUC amplifiers) and a remote RF Power Meter. The SSPAs and RF Power Meter must be connected to the RCP Local Serial Port (J5) via RS485 4-wire or 2-wire interface. All connected components must utilize Teledyne Paradise Datacom String Serial Protocol at 9600 Baud.

If properly configured, the RCP will allow the user to remotely change the Mute Status and Attenuation Level of the connected units, and monitor the Output RF Power. Under such control, all connected units are exclusively controlled by the RCP unit and any new unit added to the system will be automatically adjusted to the selected Attenuation Level and Mute State.

Units equipped with firmware version 3.30 or later have extended remote system monitoring features, including the ability to monitor and display individual unit temperature and ambient temperature (if the system is equipped with a Teledyne Paradise Datacom remote RF Power Meter). Moreover, the unit has an additional option to mute a sub-system during the period of switchover (see **Section 3.3.5.8**).

> **Note:** The SSPA fault status is not controlled via the serial line, therefore all controlled SSPA summary alarm lines still have to be connected to the RCP External Alarms Port (J8). A Teledyne Paradise Datacom Remote RF Power Meter can be powered up either from the RCP unit (when remote control mode is enabled, the RCP will automatically turn on its LNA/LNB Power supplies) or from an external DC power source with the following characteristics: Output voltage +13/17/26V; Minimum Output Current 300 mA.

Starting with RCP firmware version 3.40, the RCP supports External Reflected Power Monitoring. Monitor unit supports measurement of overall system Reflected Power within 20 dBm range with +/-1 dBm accuracy. The current value of the Reflected power can be viewed on the first informative screen of subsystem menus or accessed through the remote control interface. Outside of specified range, the accuracy of measurement is not guaranteed. If the supplied system is not equipped with this feature, the monitor value of reflected power on the front panel VFD will indicated as "N/A".

4.5.1 Configuring the RCP for Remote Control Mode

The RCP unit has to be configured to support remote control of the system. To do so, perform the following steps:

1. Press the **Main Menu** key on the RCP front panel;
2. Select **5.Options** and press the **Enter** key;
3. Select **6.More** and press the **Enter** key;
4. Select **3.SSPA** and press the **Enter** key;
5. Select **3.System Type** and press the **Enter** key;
6. Select **2.RM SSPA** if you want to control a system of Rack Mount SSPAs, Select **3.CO SSPA** if you want to control a system of Compact Outdoor SSPAs, or Select **4.vBUC** if you want to control a system of vBUC amplifiers, then press the **Enter** key. To disable the remote control feature, select **1.None** and press the **Enter** key;
7. Select **4.View** and press the **Enter** key;

Your RCP unit is now ready to control a remote system. After the RCP unit is configured to control a remote system, make sure the system is correctly wired. See **Tables 4-1**, **4-2** and **4-3** for proper wiring.

Table 4-1: Compact Outdoor SSPA Wiring

RCP2 J5 Serial Local	SSPA1 M&C J4*	SSPA2 M&C J4	SSPA3 M&C J4
1,9 (RX+; 120 Ohm Termination)	T (TX+)	T (TX+)	T (TX+)
2 (RX-)	E (TX-)	E (TX-)	E (TX-)
3 (TX-)	F (RX-)	F (RX-)	F (RX-)
4 (TX+)	U (RX+)	U (RX+)	U (RX+)
5 (Ground)	B,V (Mute In, GND)	B,V (Mute In, GND)	B,V (Mute In, GND)
RCP2 J8 Ext. Alarm	**SSPA1 M&C J4**	**SSPA2 M&C J4**	**SSPA3 M&C J4**
1 (Ext. Alarm 1)	b (Summary open on fault)		
2 (Ext. Alarm 2)		b (Summary open on fault)	
3 (Ext. Alarm 3)			b (Summary open on fault)
4 (Ground)	a (Summary Common)	a (Summary Common)	a (Summary Common)

* If the cable length exceeds 50 ft., a termination resistor of 120 Ohms must be installed between F and U of the SSPA1 M&C J4 connector.

Table 4-2: Rack Mount SSPA Wiring

RCP2 J5 Serial Local	SSPA1 Serial Main J4	SSPA2 Serial Main J4	SSPA3 Serial Main J4
1,9 (RX+; 120 Ohm Termination)	1 (TX+)	1 (TX+)	1 (TX+)
2 (RX-)	2 (TX-)	2 (TX-)	2 (TX-)
3 (TX-)	3 (RX-)	3 (RX-)	3 (RX-)
4 (TX+)	4,9 (RX+; 120 Ohm Termination)	4,9 (RX+; 120 Ohm Termination)	4,9 (RX+; 120 Ohm Termination)
5 (Ground)	5 (GND)	5 (GND)	5 (GND)
RCP2 J8 Ext. Alarm	**SSPA1 Serial Main J4**	**SSPA2 Serial Main J4**	**SSPA3 Serial Main J4**
1 (Ext. Alarm 1)	8 (Summary open on fault)		
2 (Ext. Alarm 2)		8 (Summary open on fault)	
3 (Ext. Alarm 3)			8 (Summary open on fault)
4 (Ground)	7 (Summary Common)	7 (Summary Common)	7 (Summary Common)

Table 4-3: vBUC Wiring

RCP2 J5 Serial Local	vBUC1 Serial Main J4*	vBUC2 Serial Main J4	vBUC3 Serial Main J4
1,9 (RX+; 120 Ohm Termination)	R (TX+)	R (TX+)	R (TX+)
2 (RX-)	U (TX-)	U (TX-)	U (TX-)
3 (TX-)	U (RX-)	U (RX-)	U (RX-)
4 (TX+)	R (RX+)	R (RX+)	R (RX+)
5 (Ground)	L (Isolated GND); J,K (Ext. Mute, GND)	L (Isolated GND); J,K (Ext. Mute, GND)	L (Isolated GND); J,K (Ext. Mute, GND)
RCP2 J8 Ext. Alarm	**vBUC1 M&C J4**	**vBUC2 M&C J4**	**vBUC3 M&C J4**
1 (Ext. Alarm 1)	D (Summary open on fault)		
2 (Ext. Alarm 2)		D (Summary open on fault)	
3 (Ext. Alarm 3)			D (Summary open on fault)
4 (Ground)	F (Summary Common)	F (Summary Common)	F (Summary Common)

* If the cable length exceeds 50 ft., a termination resistor of 120 Ohms must be installed between R and U of the vBUC1 M&C J4 connector.

All attached units must be properly configured in order to work under RCP Remote Control. The following parameters must be set for each unit:

1. Serial Protocol to “Normal” or “String”;
2. Selected Baud Rate to 9600;
3. Type of Serial Interface to “RS485”;
4. Unique address selected as follows:
   A.SSPA1=1;
   B.SSPA2=2;
   C.SSPA3=3
   D.Remote RF Power Meter=4.

4.5.2 Controlling PowerMAX Systems

Starting with firmware version 6.00, the controller has the capability to remotely control PowerMAX systems. The unit is capable of simultaneous control of three independent PowerMAX systems. Each PowerMAX system must be configured for Floating Master Mode (for details on this mode, see the PowerMAX manual).

As with control over an individual HPA, PowerMAX systems have to be configured for a specific Master response serial address: 1, 2 and 3. Unique HPA chassis in the system must be set outside of the control address range. Recommended addressing for individual chassis are: 11 to 18 for the first system; 21 to 28 for the second; and 31 to 38 for the third.

Each PowerMAX system will be viewed as single HPA unit and top level parameters will be monitored by the controller.

PowerMAX is essentially a N+1 redundancy system where any HPA chassis can perform the master controller functions. In order for the controller to automatically connect to the current master unit, a RS-485 connection to all HPAs in the connected systems must be provided.

Since the total number of connected units may reach 24 units, care must be observed when the RS-485 network is laid out. Racks need to be daisy chained with 4-wire twisted pair cable and line termination enabled only on the farthest RS-485 node.

PowerMAX control mode is different from regular RM SSPA, therefore selection of the appropriate mode from remote control system selection is important.

1. Press the **Main Menu** key on the RCP front panel;
2. Select **5.Options** and press the **Enter** key;
3. Select **6.More** and press the **Enter** key;
4. Select **3.SSPA** and press the **Enter** key;
5. Select **3.System Type** and press the **Enter** key;
6. Select **6.PMax** then press the **Enter** key.

4.5.2 Using M&C Features of RCP to Control an SSPA System

All SSPA control-related functions are grouped on the same menu, the SSPA control menu. To access the SSPA control menu, perform the following sequence on the RCP front panel:

1. Press the **Main Menu** key;
2. Select **5.Options** and press the **Enter** key;
3. Select **6.More** and press the **Enter** key;
4. Select **2.SSPA Ctrl** and press the **Enter** key.

The SSPA control menu will be displayed on the front panel VFD as follows:

1.SSPA Info	3.Mute	5.More
2.Attenuation	4.Units	

All of the following steps describe RCP remote operation of an SSPA, and assume the user has already selected the SSPA control menu.

4.5.2.1 Change Mute State

To change the overall mute state of a controlled SSPA system from the RCP, perform the following steps:

1. Select **3.Mute** and press the **Enter** key;
2. Select desired Mute state and press the **Enter** key;

Beginning with firmware version 6.15, when the controller's System Mode (**Main Menu** > **3.Operation** > **1.System**) is set to **1:2 Mode**, the following mute selections affect the mute state on each polarity as described below:

- **1.Mute On** — mutes both Polarity 1 (POL1) and Polarity 2 (POL2);
- **2.Mute Off** — unmutes both POL1 and POL2;
- **3.Pol 1 Mute (1:2 Only)** — mutes POL1 in 1:2 mode (firmware v. 6.15);
- **4.Pol 2 Mute (1:2 Only)** — mutes POL2 in 1:2 mode (firmware v. 6.15).

When any other system mode is selected, options **3.Pol 1 Mute (1:2 Only)** and **4.Pol 2 Mute (1:2 Only)** perform the same function as option **1.Mute On**, and will mute both POL1 and POL2.

If mute for the desired polarization is selected, the controller will automatically send a command to the HPA which is currently connected to the relevant RF switch. Depending on a combination of RF switches and polarity preference settings, it could be HPA1 or HPA2 for POL1, or HPA2 or HPA 3 for POL2. The controller will continue to sustain the selected mute state for the chosen polarization even after manual or automatic switchover.

4.5.2.2 Change Attenuation Level

To change the overall attenuation level of a controlled SSPA system from the RCP, perform the following steps:

1. Select **2.Attenuation** and press the **Enter** key;
2. Select the desired level of attenuation and press the **Enter** key;

4.5.2.3 Change Switch Mute Option Value

The following option was introduced into the RCP control setup to overcome a problem with microwave arcing, which may potentially damage a switching component if switching RF power exceeds 400 Watts. This particular problem becomes a critical issue if coaxial RF pass switches are used.

In general, all Teledyne Paradise Datacom SSPAs are well protected against high reflected power conditions which may take place during output microwave switchover. But with certainty, waveguide or coaxial switches will develop an internal electrical arc during switchover if the output power is significant. Such conditions, will not lead to instant failure, but over time may diminish some critical RF switch characteristics.

If this option is enabled, the system ability to output RF power will be bonded to the switch position sensing circuitry. This circuitry consists of the following components: a RCP electronic switch position detector; a wiring harness between the RCP and RF switch; and RF switch position sensors. Failure of the above components will lead to break in transmission.

Paradise Datacom LLC strongly recommends to not enable this option unless absolutely necessary.

Note: In order to enable switch muting, the system sub type must be selected to either CO SSPA, RM SSPA or vBUC! If the system type set to “None,” the switch muting setting will be inhibited.

There are four selections under this option: No muting (“1.SWMute OFF”); internal muting (“2.Internal On”); external muting (“3.External On”) or all switch muting is on (“4.All ON”).

Internal muting refers to the particular RCP unit itself. If the position of one of the controlled RF switches changes or is about to change, the RCP will mute the SSPA subsystem by issuing a special “mute command” over the RS485 serial interface.

When the RF switch position indicator detects that the switch reliably reached Position1 or Position2, a “Mute Off” command will be issued to the SSPA subsystem over the serial interface. If the switch gets stuck between positions, the system will remain muted until the situation is resolved or the Switch Mute option is turned off.

External muting may be used when the RCP/SSPA subsystem is part of a larger sys-

tem. This requires a connection to RCP Port J7, Pin 16 (Auto/Manual Select), and the Switch Mute setting selected to “3.External On” or “4.All ON”. To activate the mute-on-switch function, generate a pulse to signal ground on RCP Port J7, pin 16 (starting at least 100 mS before the switch position begins to change). The pulse should continue until switchover is complete. Consult the factory for more information.

Beginning with firmware version 6.15, the controller is capable of selectively muting HPAs on a given polarity during switchover while operating in 1:2 Mode. If switch muting mode is enabled in 1:2 Mode, the controller will automatically analyze the RF path changes which will occur during switchover. Whenever possible, the controller will mute only the HPAs along the RF path (polarization) that is disturbed during the switchover process, and will leave the remaining HPAs connected to the other RF path (polarization) unmuted.

For example, for a controller with a starting configuration of: Unit 1 online on Polarity 1, Unit 3 online on Polarity 2, Unit 2 on standby; if the system was switched to put Unit 2 online on Polarity 1, only RF Switch 1 (SW1) needs to be rotated to make a change. The Unit 3 RF path connected to Polarity 2 will be undisturbed by the switchover. In this case, the controller will only mute Unit 1 and Unit 2 until the switchover process on Polarity 1 is complete, and will leave Unit 3 unmuted on Polarity 2. See **Figure 4-11**.

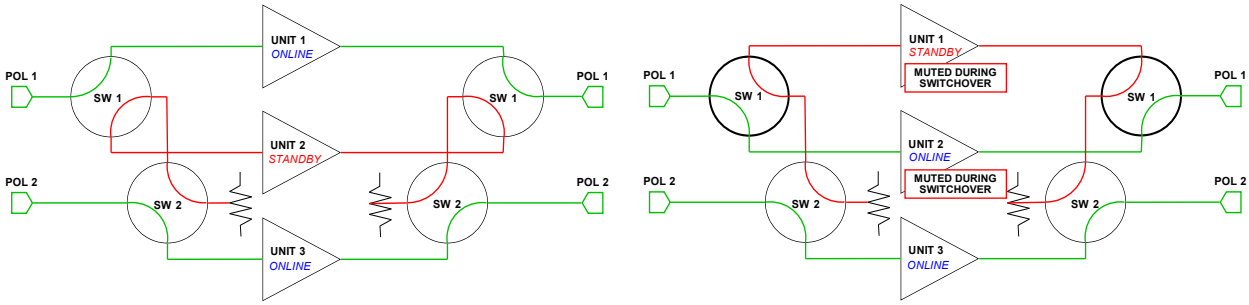

Starting Configuration **Configuration After Switchover**

Figure 4-11: Switching Unit 2 from Standby to Online on POL 1

However, for a controller with a starting configuration of: Unit 1 on standby, Unit 2 online on Polarity 1, Unit 3 online on Polarity 2; if the system was switched to put Unit 3 on standby, it will require simultaneous rotation of RF switches 1 (SW1) and 2 (SW2). Thus, the RF path for all three HPAs will be disturbed and the controller will need to mute the entire system until the switchover process is complete. See **Figure 4-12**.

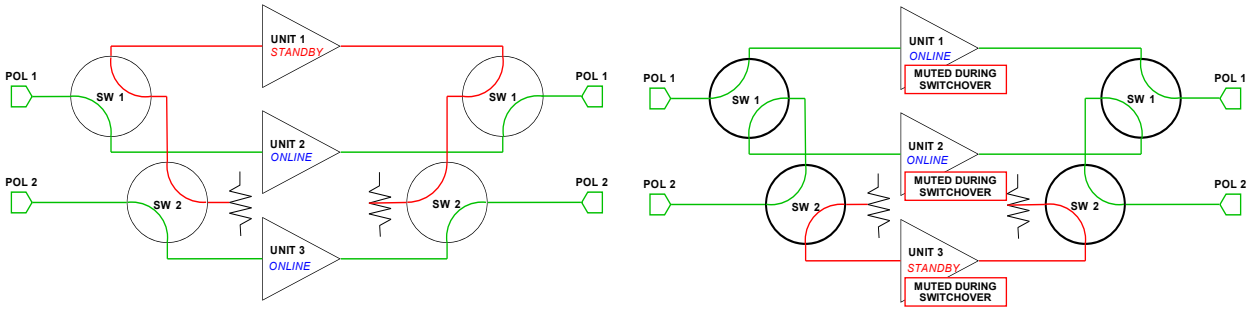

Starting Configuration **Configuration After Switchover**

Figure 4-12: Switching Unit 1 from Standby to Online on POL 1

4.5.2.4 Units

This option allows the user to select the RF Power measurement units (measured in either dBm or Watts) reported on the front panel and remote interface. Both Forward and Reflected RF power sensor measurements will be affected.

4.6 View SSPA System Info

To verify a selection on the SSPA control menu, select **4.View** and press the **Enter** key. The selected attenuation, forward RF power level, system mute state and type of the selected system will be displayed on the front panel VFD.

> **Note:** The Forward RF Power Level can be displayed only if a Teledyne Paradise Datacom remote RF Power Meter was included in the system. Otherwise, this item will display “N/A” for not available.

SSPA sub system info page 1 pertains to conditions and settings common to all SSPAs in a subsystem (RCP firmware version 3.10 or better).

- **Atten.(dB)** is the current level of subsystem attenuation. All SSPAs in the system are adjusted simultaneously and have same level of attenuation.
- **Mute** – Indicates the overall mute state of the subsystem. Mute state is applied to all connected SSPAs, the mute state of an individual SSPA can’t be different then the system mute state.
- **FrwrdRF(Watts/dBm)** – System forward RF power detector readout (if equipped). The readout can be represented in Watts or dBms. If the subsystem is not equipped with this power detector, the readout will display N/A.
- **Ref.RF(Watts/dBm)** (RCP firmware version 3.40 or better) – Readout from system reflected RF power detector (if equipped). The readout can be represented in Watts or dBms. (see Units menu selection). If the subsystem is not equipped with this power detector, readout will display N/A.

SSPA sub system info page 2 (RCP firmware version 3.60 or better) pertains to individual SSPA output power levels.

- **UnitRFx(dBm)** – The forward RF output level of each individual SSPA. The readout can be represented in dBms only. The value of an individual forward RF power is measured on the output flange of a particular SSPA. If the SSPA unit is not present in the system, readout will indicate N/A.

> **Important!** Real system output power most likely will be different from this parameter. In 1:1 or 1:2 systems, losses in switching and waveguide systems are not accounted. In phase combined systems, real output power will depend on the combining configuration. For system output power, refer to FrwrdRF(Watts/dBm) on SSPA subsystem info page 1.

SSPA sub system info page 3 (RCP firmware version 3.10 or better) pertains to each individual SSPA unit's core temperature and ambient temperature.

- **Ambient(C)** – ambient temperature readout in °C. This readout is available only on the systems equipped with forward RF power sensor, otherwise it will indicate N/A.
- **Unitx(C)** – is an individual SSPA unit's core temperature in °C. If a unit is not present in the current system configuration, value will read N/A.

SSPA sub system info page 4 (RCP firmware version 3.60 or better) pertains to individual SSPA unit's DC current consumption.

- **UnitDCx(Amp)** – DC current consumption of a SSPA unit, measured in Amperes. If a unit is not present in the current system configuration, value will read N/A.

SSPA sub system info page 5 (RCP firmware version 3.30 or better) pertains to additional subsystem settings.

- **System Type** – is the type of connected SSPA subsystem. Possible readout: Compact – for subsystem of Compact Outdoor SSPAs; RM – for subsystem of Rack Mount SSPAs; and vBUC – for subsystem of vBUC amplifiers.
- **SWMute** – is type of switch muting implemented on the current system. Off – no switch muting; External – for external switch muting input; Internal – for switching associated with this RCP unit; Both – utilization of switch muting inputs.

4.7 Advanced System Level Troubleshooting with RCP

The RCP controller offers the ability to control various systems, which can include various subcomponents. In some cases it is important to quickly pinpoint a faulty component without system disintegration. The RCP controller offers such capabilities. The following section describes the troubleshooting procedure for some systems.

4.7.1 Scenario 1

A 1:2 system contains devices connected to the RCP external port (SSPA) as well as an array of LNA devices connected to the Plate assembly port. Major faults are configured to track both types of fault. Fault logic is set to “High”. The RCP indicates a Unit1 fault. To determine which component of the controlled setup is failed, scroll down to System Info Page 4 and verify the status of the “LNA faults” and “SSPA faults” items. One or both items should indicate “1----”.

If the faulted element is found in the LNA setup, the user can double-check what caused it. Perform the following steps: Press the **Main Menu** key; select **6.Calibration** and press the **Enter** key; select **4.View CalPoints** and press the **Enter** key. The VFD will display the advanced LNA/LNB debugging screen, which will show calibration points and current consumption for each LNA. Note the difference between the “LNA1 (mA)” and “Cal1(mA)” values displayed on the screen.

If the faulted element is found in the SSPA setup, double-check the fault causing the problem by selecting Info page 5. Note the state of the “ExtFaults” item, which should indicate “Aux-111 HPA001”. This explains why unit 1 was considered as faulted (note logic “high” state “1” in “HPA001 “).

4.7.2 Scenario 2

In a 1:2 SSPA system with 5 auxiliary devices connected to the RCP external faults port, the RCP utilizes “fault on high” logic. Auxiliary faults are enabled.

An auxiliary fault indicates “Fault” condition. To find which auxiliary line indicates fault, browse to Info page 5. Note the value of “ExtFaults” item.

AUX-[Unit 3][Unit 2][Unit 1], where the “#” in “Unit #” is either “1” or “0”. A “0” indicates a fault and “1” indicates no fault.

So if the value shown on the display is “AUX-011 HPA000”, that indicates a fault state for auxiliary devices connected to auxiliary port lines 2 and 1.

5.0 Design Philosophy

The RCP series of redundant controllers was designed to achieve a new level in high reliability, maintenance free operation. A tightly integrated modular assembly approach has been used to realize an extremely versatile controller while maintaining its user friendly operator interface. Five basic building blocks are combined in the RCP redundant controller:

1. Redundant Power Supplies
2. Digital Core Board Assembly
3. I/O Board Assembly
4. Vacuum Fluorescent Display
5. Front Panel Mimic Display

5.0.1 Redundant Power Supplies

A block diagram of the controller is shown in **Figure 5-1**. Two power supplies are provided in the controller. These supplies can be connected to two independent AC sources for absolute system redundancy. Either supply is capable of operating the controller and its associated transfer switches. Both power supplies have universal input capability operating over an input voltage range of 85 to 265 VAC and line frequencies of 47 to 63 Hz. The power supplies have a power factor of 0.93 ensuring minimum line harmonic products. Each power supply produces +26 VDC.

The RCP2 provides three channel power outputs for connecting external LNA/LNB units. In standard configuration, each LNA/LNB channel can be selected to supply 13V or 17V with up to 900 mA DC current output. Output voltage is user-selectable either from the front panel menu or over the remote control interface. The -HP model provides an additional 24V 1500 mA output option for use with higher power external equipment.

All channels are protected from overload and will reduce output if the maximum power output capacity is exceeded by an external load.

Note for 24V 1500 mA channel output: In order to provide an equal load to both internal AC/DC supplies, channels derive their power asymmetrically: Channel 1 from PS2, Channel 3 from PS1; and Channel 2 from either PS2 or PS1. See **Figure 5-1**. This configuration allows default standby Channel 2 to power up in case one of the AC/DC power supplies fails. In order to conserve power from the remaining power supply, the LNA/LNB channel will reduce its power output to 13V, 900 mA.

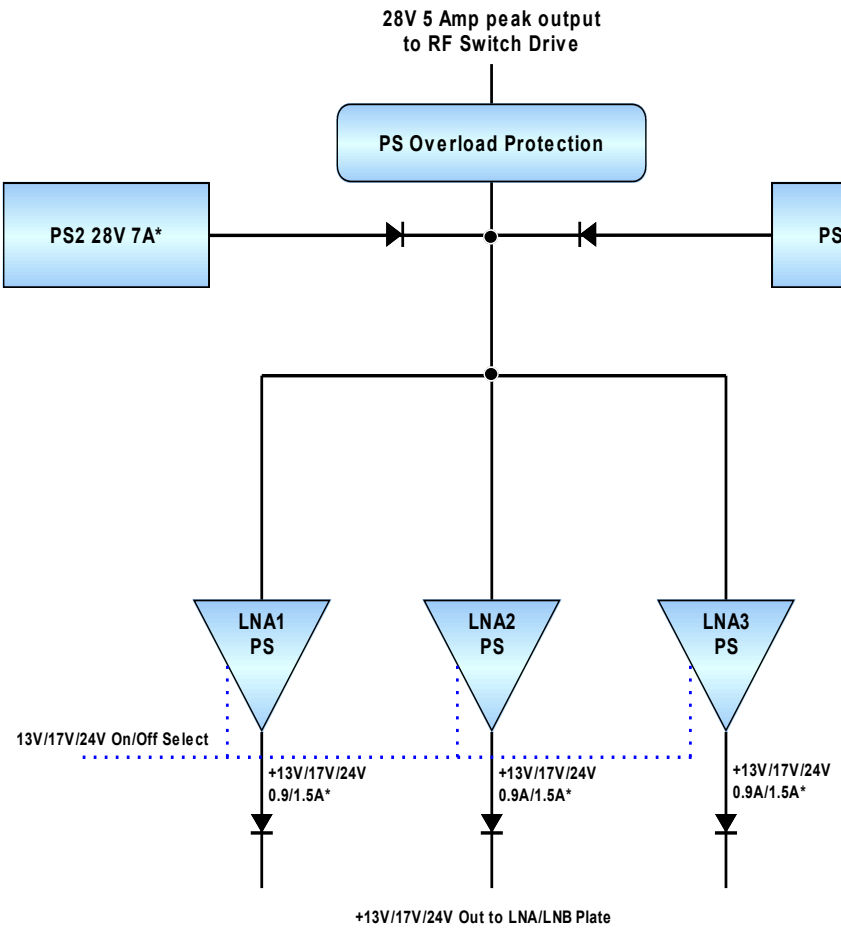

* Continuous 1.5A output only available with -HP version,
Standard RCP2 4A with 1.5A peak current, 0.9A continuous

Figure 5-1: Block Diagram, Power Supply Configuration

5.0.2 Digital Core Board

The Digital Core Board is operated by microcontroller unit. All digital I/O lines feature transient absorbing devices and a ground isolated barrier for extra protection. The power supply lines are protected by current limiting devices. The digital core board also contains a USB port that allows the RCP to be firmware upgradeable in the field.

5.0.3 I/O Board Assembly

The I/O Board Assembly contains the primary parallel (hardware) interface circuitry of the controller. It is physically attached to the Digital Core Board by a 40-pin header. The I/O Board provides user selectable output voltage: +13, 17 and 24 VDC supply output for the LNB units.

Each output on a standard unit can supply continuously up to 0.9A and up to 1.5A in peak current. The -HP version can supply 1.5A continuously. All channels are short circuit protected. The 10 Form C relays and opto isolated inputs for the parallel I/O interface are included on this board assembly. A series of rugged N-channel enhancement

mode MOSFET devices provide the current sink circuitry to drive either one or two waveguide transfer switches.

5.0.4 Vacuum Fluorescent Display

Rarely found in redundant controllers, the RCP provides a large 2 line by 40 character alphanumeric display. This provides an extremely user friendly interface. The VFD is directly interfaced to the microcontroller via the address and data bus. Virtually all of the controller's setup and adjustments are accessible from the VFD display. There is no need to access the interior of the controller to make any setup changes.

5.0.5 Front Panel Mimic Display

The front panel display is a densely integrated array of LEDs and switches that comprise an important part of the user friendly interface. A great deal of human engineering has gone into the design of this membrane panel. A full complement of alarm indicators are provided along with the mimic display which shows the switch positions of the redundant system. Four separate navigation keys along with a separate **Enter** key allow the user to easily navigate the firmware menu on the Vacuum Fluorescent Display. Separate keys have been provided for frequently used functions, further enhancing the controller's ease of use.

5.1 Control Cable Considerations

The RCP series of redundant controllers is designed to drive negative 28 VDC latching style transfer switches. Latching means that the switch has a self cutoff and does not require continuous current consumption. Some commonly used waveguide transfer switches used in Teledyne Paradise Datacom Redundant Systems are given in **Table 5-1**.

Table 5-1: Commonly Used Waveguide Transfer Switches

Part Number	Description	Manufacturer	Voltage Range	Current
75SBOS	10.7-14.5 GHz Waveguide/Coax	Sector	-20 to -30 VDC	0.80 Amps
3NBGS	5.8-6.4 GHz Waveguide/Coax	Sector	-20 to -30 VDC	2 Amps
2SBGS	3.7-4.2 GHz Waveguide/Coax	Sector	-20 to -30 VDC	3 Amps
4BF	1.7-2.6 GHz Waveguide	Sector	-20 to -30 VDC	4 Amps

As **Table 5-1** shows, the switch drive current is dependent on the frequency band which determines the physical size of the switch motor. Therefore the system designer must consider the resistive cable losses when choosing a control cable length.

Similarly, the system designer must ensure use of the proper cable insulation for the particular installation. Teledyne Paradise Datacom uses both standard service and burial grade for redundant system control cables. Standard service cable has a PVC jacket which is ultra violet ray (UV) stable in outdoor use. However, standard service cable should not be immersed in water or be buried underground for long periods of time. For such applications, burial grade cable should be installed.

The controller sources a maximum +26 VDC @ 5 Amps to the transfer switch. A typical -28 VDC waveguide switch will operate over a range of -20 to -30 volts. Therefore, the minimum voltage required at the waveguide switch is -20 VDC. Using this as a design guideline, the control cable should be sized so that it does not drop more than 6 VDC from the controller to the switch.

Teledyne Paradise Datacom control cables utilize 20 conductors of #18 AWG stranded wire. The control cable schematic is shown in **Figure 5-2**. The resistance of #18 AWG stranded wire is 6.5 ohms per 1000 feet. The controller switch connector (J3) allows contacts for two wires per switch connection. Therefore, two conductors can be paralleled for both the source and return lines for the transfer switch. With a maximum allowable voltage drop of 6 volts, this equates to a 3 volt drop in the source wires and 3 volt drop in the return wires. This is shown schematically in **Figure 5-2**. Using four (4) parallel #18 AWG conductors gives a resultant cable resistance of 1.6 ohms per 1000 feet, or 0.0016 ohms per foot.

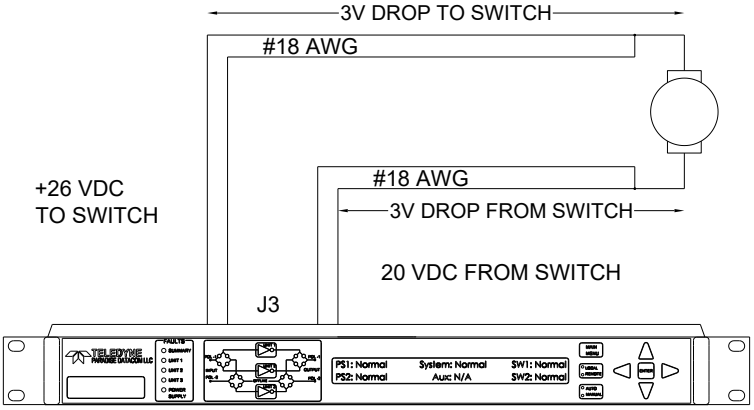

Figure 5-2: Cable Losses to Transfer Switch

To calculate the maximum cable length that can be accommodated to the transfer switch, first consider the current draw by the switch either from the manufacturer's data or from **Table 5-1**. Next divide this current into 6 volts. This gives the maximum cable resistance to and from the switch. Finally, divide this cable resistance by 0.0016 ohms/ft. to find the maximum cable length. This is shown in the following example:

```
Switch Current draw = 3 Amps
6 V / 3 Amps = 2 ohms (maximum cable resistance)
2 ohms/0.0016 ohms/ft. = 1250 ft.;
maximum cable length using (4) #18 AWG connectors
```

Table 5-2 gives the maximum cable length for some popular switches.

Table 5-2: Maximum Cable Length for Selected Switches (Single Switch Systems)

Part Number	Description	Manufacturer	Maximum Cable Length
75SBOS	10.7-14.5 GHz Waveguide/Coax	Sector	4,690 ft. (1,430 m)
3NBGS	5.8-6.4 GHz Waveguide/Coax	Sector	1,880 ft. (572 m)
2SBGS	3.7-4.2 GHz Waveguide/Coax	Sector	1,250 ft. (381 m)
4BF	1.7-2.6 GHz Waveguide	Sector	938 ft. (286 m)

THIS PAGE LEFT INTENTIONALLY BLANK

6.0 Introduction

The RCP series of redundant controllers has been designed to be maintenance free. The only user replaceable parts are the AC input fuses.

6.1 Fuse Replacement

The AC input fuses are 2 Amp Slow Blow style fuses and are accessible at the AC input entry module. **Figure 6-1** shows the location of the input fuses.

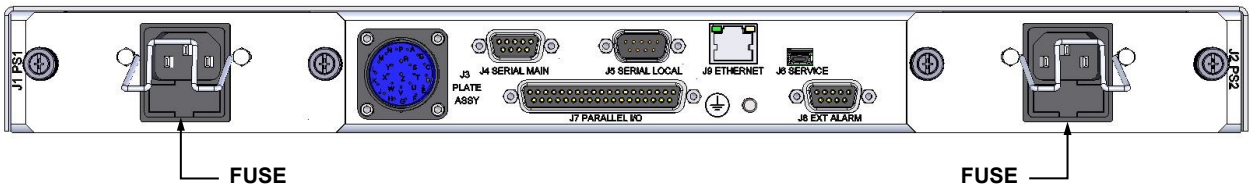

Figure 6-1: Controller Rear Panel Fuse Location

The fuse part number is Littlefuse 217002, 2 Amp.

6.2 Firmware Programming

Teledyne Paradise Datacom's digital engineers continually strive to improve the performance of RCP2 software and firmware. As this occurs, software and firmware upgrades are made available.

The DigiCore5 controller board allows two methods for upgrading the unit firmware:

- Upgrade over HTTP link by using web browser;
- Over programming USB connector J1;

The web upgrade is performed over the RCP2 IP port and does not require any special software. It can be performed through any suitable web browser.

Upgrade over the USB port requires the installation of specific hardware USB drivers and batch scripts.

6.2.1 Required Hardware

The following equipment/hardware is necessary to perform the firmware upgrade.

- Depending on type of upgrade: Win7/XP PC with USB port or PC with available 10/100 Base-T port;
- Mini USB cable or Ethernet patch cable;

6.2.2 Required Software

For web upgrade:

- Web browser (IE, Chrome or Firefox);

For USB upgrade:

- USB FTDI VCP drivers. Drivers need to be installed before making a connection between the PC and the SSPA USB programming port. Visit the FTDI web page (http://www.ftdichip.com/Drivers/VCP.htm) for the latest set of virtual COM port (VCP) drivers.
- RCP2 field programing utility. Contact Teledyne Paradise Datacom technical support to obtain the latest version. The Field Programming utility is typically not required for installation.
- Firmware image upgrade file: code.bin.

6.2.3 Web Upgrade Procedure

The web upgrade is the preferred method of upgrading the firmware.

Upgrading unit with incompatible firmware image may damage the equipment hardware. To ensure the proper firmware image file is used, contact Teledyne Paradise Datacom technical support. Write down your current firmware version. You may want also request image file of the current firmware in case it becomes necessary to revert back to the original.

1. Connect the unit to a 10/100 Base-T network or to a PC 10/100 Base-T network adapter. See **Appendix A**.
2. Open a web browser window (Chrome, Firefox or IE are preferred). Enter the following address in the location window of the browser:
   XXX.XXX.XXX.XXX/fw/
   where XXX.XXX.XXX.XXX is the IPv4 address of the unit. Press Enter.
3. The Upload Form is password protected. An authentication window should come up to ensure authorization. Use “admin” as user name and the web logon password (default password is “paradise”). Click the “Log in” button (see **Figure 6-2**).

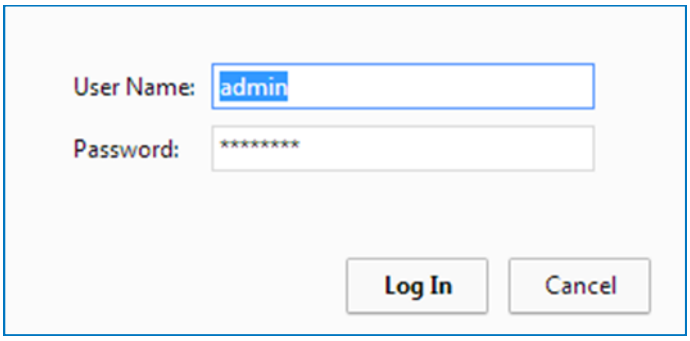

Figure 6-2: Web Upgrade Authentication Window

4. The firmware upload form will load in the browser window (See **Figure 6-3**). Click the “Choose File” button and select the firmware image code.bin file provided by technical support.

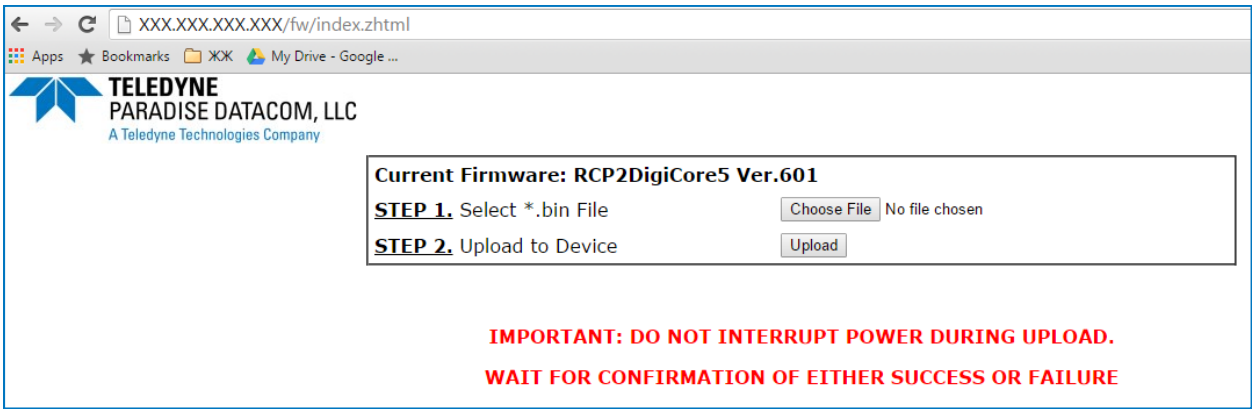

Figure 6-3: Firmware Upload Form

5. Click the “Upload” button. A warning message will appear; click the “OK” button (See **Figure 6-4**).

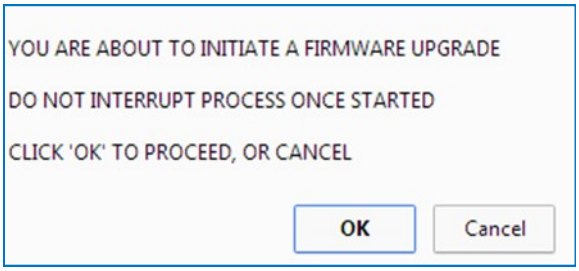

Figure 6-4: Proceed With Upgrade Prompt

6. The upload process will begin and the form will be informing about loading process (See **Figure 6-5**). Do not interrupt this process and wait until its completion with positive or negative result. The process may take up to 15 minutes. When completed, the form will notify about end of process. See **Figure 6-6**.

Figure 6-5: Upload Process Message

Figure 6-6: Upload Completed Message

7. During the upgrade process, the unit remains fully functional. The new firmware will stay dormant until the next reboot of the control card. Reboot the controller card by selecting the relevant front panel menu or by cycling power to the unit. Browse to the front panel menu firmware information page and verify the installed version.
8. If the load process was interrupted, for any reason, the unit may not operate properly after a reboot. It is still possible to recover from the problem by applying firmware upload over USB port. See **Section 3.1.4.4** for details.

6.2.4 USB Port Upgrade Procedure

1. Contact Teledyne Paradise Datacom support to obtain the latest firmware image and field programing utility. The programming utility package includes an RFU upload utility, a script file and FTDI USB drivers. Use the USB upgrade method only if the web upgrade has failed!
2. Install FTDI VCP driver on the target PC;
3. Connect the USB mini port J1 at the back of unit to an available PC USB port. Warning! Connecting J1 to a PC USB will interrupt normal operation of the unit.
4. After connecting the unit, the target PC should recognize the newly connected hardware and connect to it using the previously installed VCP FTDI drivers. Wait until this process is complete. Check the Windows device manager Ports section and note the newly added USB Serial Port (See **Figure 6-7**). You will need a COM port designator in the next step.

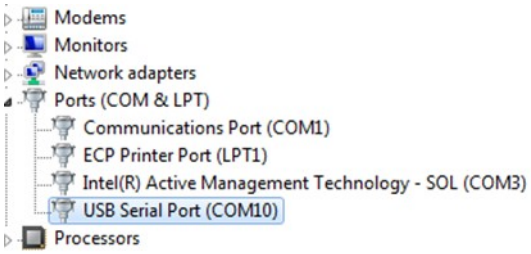

Figure 6-7: Windows Device Manager > Ports

5. Locate and run Upgrade.bat script file which was provided in firmware upgrade package. File will open command prompt window and request programing serial port designator. Enter port designator located in previous step and then press “Enter”. The script file will start downloading a new image file to the unit. The resulting window is shown in **Figure 6-8**;

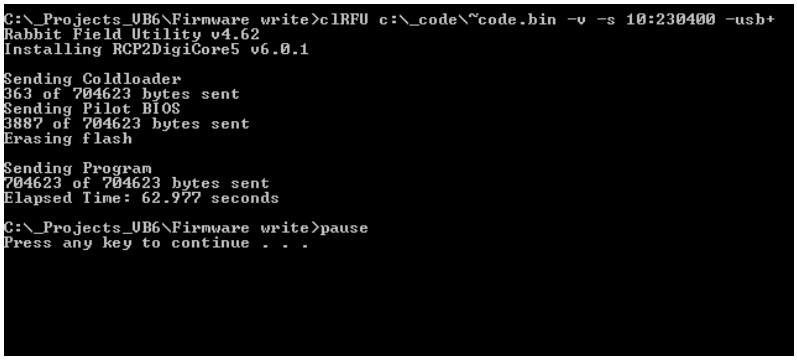

Figure 6-8: Command Window Showing Program Prompts

6. Unplug the USB cable from the control card. The unit should restart with the new firmware image.

6.3 Restoring Factory Pre-set Settings on RCP2/FPRC

The Teledyne Paradise Datacom Redundant System Controller comes with factory-preset settings specific to the default system specifications. This factory setup can be restored at any time either automatically or manually.

> **Important**: Automatic restoration will restore complete factory setup (including COM settings and miscellaneous fault handling). Manual restoration has to be done one item at a time and only settings critical to system operation will be restored.

6.3.1 Automatic Restore

To restore settings automatically, follow these simple steps:

1. On the front panel keypad, press the **Main Menu** key;
2. Select menu item **5.Options** and press the **Enter** key;
3. Select menu item **2.Restore** and press the **Enter** key;
4. Select menu item **2.Restore Fctry** and press the **Enter** key;

Default factory setup is now restored; sequentially press "Main Menu" and "Enter" to return back to the informative menu sublevel.

6.3.2 Manual Restore

Manual setup restoration is dependent on the makeup of your specific system. To undertake a manual setup restoration, follow these directions:

1. On the front panel keypad, press the **Main Menu** key;
2. Select menu item **3.Operation** and press the **Enter** key;
3. Select menu item **3.System** and press the **Enter** key;
4. Select the System menu item relevant to your system (i.e. menu item 4 for Dual 1:1) and press the **Enter** key;
5. Press the **Main Menu** key;
6. Select item **4.Flt.Setup** and press the **Enter** key;
7. Select menu item **1.Mjr.Faults** and press the **Enter** key;
8. Select menu item **2.External** if the controller is not supplying power to the LNBs; Select menu item **3.Both** if the controller must be configured as the primary power source for LNBs;
9. Press the **Enter** key;
10. Press the **Main Menu** key;
11. Select menu item **6.Calibr.** and press the **Enter** key;
12. Select menu item **2.Fault Logic** and press the **Enter** key;
13. Select menu item **1.Fault High** and press the **Enter** key.

Skip the following steps if the controller is not configured as a primary power source for the system's LNBs.

Re-calibration of LNB's fault window:

1. Make sure the LNBs are reliably connected to the controller;
2. Make sure that all LNBs are normally operational prior to system calibration;
3. Make sure the controller is configured for tracking both LNA/LNB and external faults, if not sure, repeat steps 8 to 14;
4. Press the **Main Menu** key;
5. Select menu item **6.Calibr.** and press the **Enter** key;
6. Select item **1.Fault Window** and press the **Enter** key;
7. Select item **1.8%** and press the **Enter** key;
8. Press the **Main Menu** key;
9. Select menu item **6.Calibr.** and press the **Enter** key;
10. Select item **3.Calibrate LNAs** and press the **Enter** key.

The controller should now be configured to work in a VSAT 1:1 Redundancy system.

6.4 Identifying and Replacing a Failed Power Supply

A power supply fault is always considered a major fault, and will cause the front panel Summary Alarm and Power Supply Alarm LEDs to illuminate. To identify which power supply module is faulted, follow these steps:

1. On the front panel keypad, press the **Main Menu** key.
2. Select menu item **1.Sys Info** and press the **Enter** key.
3. The resulting screen shows the status of both power supplies **PS1** and **PS2** on the left side of the display. The controller monitors the output voltage of each power supply module. If the output voltage level for a power supply is above 23V, the display will read **Normal**. If the output voltage drops below 22V, the display will read **Fault**.

When looking at the back panel of the RCP, **PS1** is on the left and **PS2** is on the right.

6.4.1 Removing a Faulted Power Supply Module

To remove a faulted power supply module from the RCP chassis, perform the following steps:

1. Loosen the two captured thumbscrews securing the module to the chassis;
2. Slide the module out of the chassis;
3. Unplug the quick-disconnect power pole connectors.

6.4.2 Installing a New Power Supply Module

First, ensure that the new power supply module is the same type as the one being replaced! See Section 2.6 to review the different power supply module types.

To install a new power supply module into the RCP chassis, perform the following steps:

1. Plug together the quick-connect power pole connectors;
2. Slide the module into the chassis, taking care not to pinch the power cables;
3. Tighten the two captured thumbscrews to secure the module to the chassis.

7.0 Overview

A system, which includes a RCP2, can be managed from a remote computer over a variety of remote control interfaces (see **Figure 7-1**).

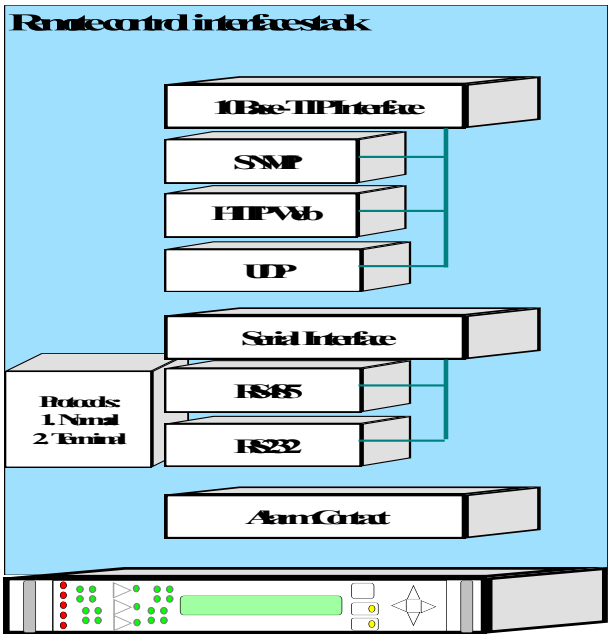

Figure 7-1: RCP2 Remote Control Interface Stack

The parallel port on the RCP unit provides a simple form of remote control. There are 10 Form C relay contacts for remote monitoring. There are six opto-isolated inputs for remote control commands. To enable the remote parallel interface, select Remote on the front panel **Local/Remote** key. When in Remote mode, all front panel commands are disabled with the exception of the **Local/Remote** key. See **Section 7.1**.

The serial interface supports both RS-232 and RS-485 standards. The control protocol supports two formats: the Normal serial protocol (as detailed in **Section 7.2**); and an ASCII based protocol suitable for HyperTerminal applications (see **Section 7.5**). Serial interface is equipped with overvoltage and overcurrent protection and benefits from full galvanic isolation from the chassis ground for extra protection.

The Ethernet interface supports multiple communication standards which can be used exclusively or simultaneously depending on the selected setting:

- IPNet - UDP encapsulated Normal serial protocol (**Section 7.6.2**);
- SNMP V1 with support of SNMP traps (**Section 7.6.3**);
- HTTP web interface (**Section 7.6.4**);

Serial protocol format is set at no parity, 8 bit with 1 stop bit. Baud rate is selectable through the front panel.

If using a Terminal mode protocol, the RCP2 provides remote menu access through a HyperTerminal program or through an actual hardware terminal.

RS485 interface pin out is compatible with most 9-pin RS485 adapters. Interface always works in half-duplex mode and is suitable for either 4- or 2-wire RS485 configuration. Maximum achievable node length for this interface is 1500 feet. Proper termination and use of shielded twisted pair cable is required to achieve long cable runs

Ethernet interface is auto selectable between 10 and 100 MBits/s speeds. Maximum node length is 100 feet. Use of CAT5E or CAT6 cables are preferred. CAT5 cable can be used for 10Base-T standard or short runs of 100Base-T.

Digicor5 digital platform controller allows simulations support of multiple remote control interfaces.

Table 7-1 shows a list of enabled interfaces depending on chosen interfaces setting.

Table 7-1: Interfaces Enabled Based on Chosen Interface Setting Selection

Interface Selection	Supported Serial Interface	Supported IP Interface
RS232	RS232	IPNet, Web M&C (read/write), SNMP (read/write)
RS485	RS485	IPNet, Web M&C (read/write), SNMP (read/write)
IPNET	RS485	IPNet, Web M&C (read/write), SNMP (read only)
SNMP	RS485	Web M&C (read only), SNMP (read/write)

Serial protocol is an independent selection and allows support of Normal or Terminal mode protocols. Operation over IP interface remains unchanged regardless of serial protocol selection.

Digicor5 digital platform controller allows simulations support of multiple remote control interfaces.

Serial protocol is an independent selection and allows support of Normal or Terminal mode protocols. Operation over IP interface remains unchanged regardless of serial protocol selection.

7.1 Remote Control - Parallel

7.1.1 Control Outputs

The hardware behind the form C relay is a single pole, double throw relay. Under normal operation (no alarms) the relays are in an energized state. When a fault occurs or the controller is powered off, the relays are in a de-energized state. The relay contacts are capable of handling a maximum of 30 VDC @ 1A . The form C relay is shown schematically in **Figure 7-2**. The form C relay contact outputs are listed in **Table 2-2**.

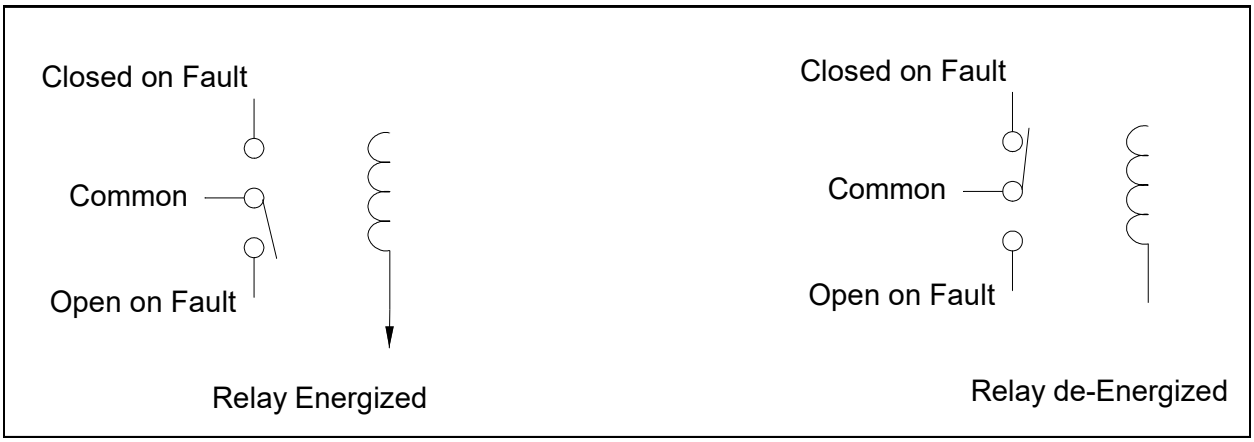

Figure 7-2: Parallel I/O Form C Relay

7.1.2 Control Inputs

The parallel control inputs are opto-isolated inputs with pull up resistors. To trigger a remote input command, the input should be pulled to ground. The input does not need to be held to ground continuously but it is acceptable to do so. The input only need be pulled low for a minimum of 20 msec. For example, to make amplifier #2 the standby amplifier, pulse pin 36 to ground for 20 msec. If the operator then chooses to make amplifier #1 the standby amplifier, simply pulse pin 37 to ground for 20 msec. The schematic representation of the control input is shown in **Figure 7-3**.

The external alarm and auxiliary alarm inputs use the same opto-isolated input circuitry shown in **Figure 7-3**.

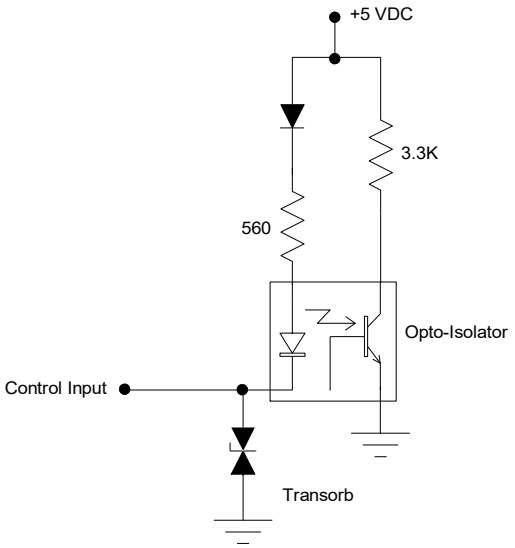

Figure 7-3: Opto-Isolated Parallel I/O Input

7.2 Serial Communication

This section describes the normal communication protocol between the RCP2 and a host computer over RS232/RS485 serial interface. Serial port settings on host computer must be configured for 8-bit data at no parity, with 1 stop bit. Baud rate should match selected baud rate parameter on RCP2 unit.

The unit will only respond to properly formatted protocol packets. **Figure 7-4** shows the basic communication packet. It consists of a Header, Data, and Trailer sub-packet.

HEADER (4 bytes)	**DATA** (6-32 bytes)	**TRAILER** (1 byte)

Figure 7-4: Basic Communication Packet

7.2.1 Header Packet

The Header packet is divided into three sub-packets which are the Frame Sync, Destination Address, and Source Address packets, as shown in **Figure 7-5**.

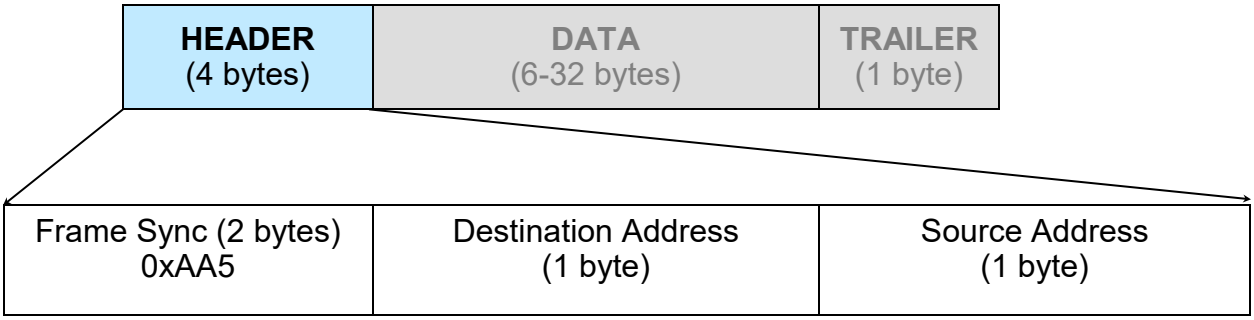

Figure 7-5: Header Sub-Packet

7.2.1.1 Frame Sync Word

The Frame Sync word is a two byte field that marks the beginning of a packet. This value is always 0xAA55. This field provides a means of designating a specific packet from others that may exist on the same network. It also provides a mechanism for a node to synchronize to a known point of transmission.

7.2.1.2 Destination Address

The destination address field specifies the node for which the packet is intended. It may be an individual or broadcast address. The broadcast address is 0xFF or 0xAA (see **Section 7.2.5** Multiple Device Access). This is used when a packet of information is intended for several nodes on the network. The broadcast address can be used in a single device connection when the host needs to determine the address of the amplifier. The RCP2 unit will reply with its unique address.

7.2.1.3 Source Address

The source address specifies the address of the node that is sending the packet. All unique addresses, except the broadcast address, are equal and can be assigned to individual units. The host computer must also have a unique network address.

7.2.2 Data Packet

The data sub-packet is comprised of six to 32 bytes of information. It is further divided into seven fields as shown in **Figure 7-6**. The first six fields comprise the command preamble while the last field is the actual data.

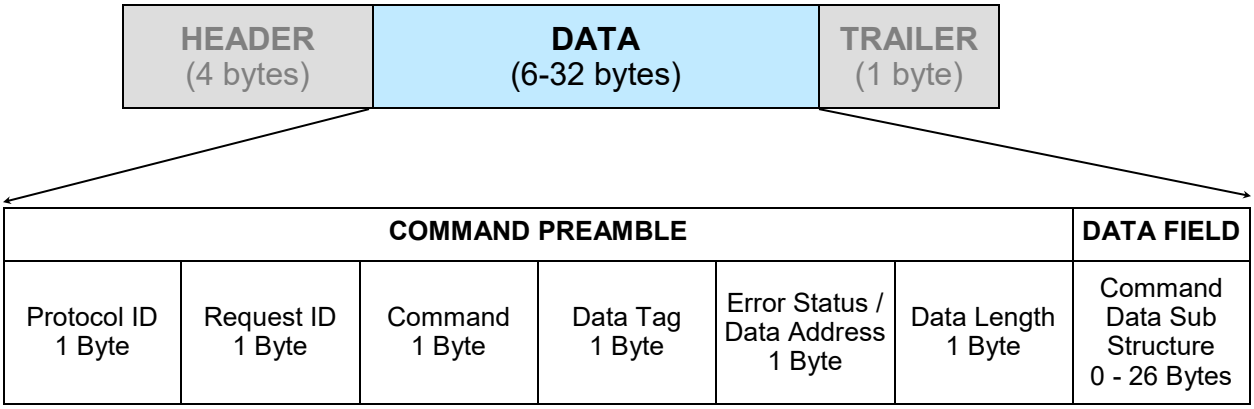

Figure 7-6: Data Sub-Packet

7.2.2.1 Protocol ID

This field provides backward compatibility with older generation equipment protocol. It should normally be set to zero. This field allows the unit to auto-detect other protocol versions, which may exist in the future.

7.2.2.2 Request ID

This is an application specific field. The amplifier will echo this byte back in the response frame without change. This byte serves as a request tracking feature.

7.2.2.3 Command

The RCP2 protocol is a table based protocol. It allows the user to view and modify data tables located on the controlled device. Throughout the remainder of this description, “sender” will refer to the host PC, and “receiver” will refer to the RCP2 unit.

Sender and receiver are limited to two commands and two command responses. The Get Request command issued by a command sender allows monitoring of existing conditions and parameters on the receiver. The Get Request frame should not have any bytes in the Data Filed and be no longer than 11 bytes.

The Response frame from the receiver will contain a Get Response designator in the Command field. If the receiver does not detect any errors in the Get Request frame, the requested data will be attached to the response frame. The length of the Get Response frame varies by the amount of attached data bytes. It may contain 11+N bytes where N is the amount of requested data bytes from a particular table, specified in the Data Length field.

The Set Request command allows the sender to actively change parameters for the receiver's internal configuration. The Set Request frame must contain a number of bytes in the Data Field as specified in the Data length field. The frame size must be 11+N bytes, where N is the length of the attached data structure. The receiver will respond with a frame where the command field will be set to a Set Response designator. The frame length is equal to the Request frame.

The byte value for each command is given in **Table 7-2**.

Table 7-2: Command Byte Values

Command Name	Command Byte Value
Set Request	0
Get Request	1
Set Response	2
Get Response	3

7.2.2.4 Data Tag

The RCP2 internal structure is organized in several tables, all of which share similar functionality and internal resources. To access the various tables, the data tag must be specified in the request frame. The data associated with certain tags is read only. Therefore only the "Get" command request would be allowed to access these data tags. The RCP2 will return an error on attempts to issue a "Set" request to a read-only table tag. Various tables may contain values formatted either in 1 or 2 bytes format. The Packet Wrapper Tag provides direct access to the RCP2 Local Port and has no table association. The data tag byte values are given in **Table 7-3**.

Table 7-3: Data Tag Byte Values

Tag Name	Data Tag Byte Value	Minimum valid length of the Data Field	Description
System Settings Tag	0	1 Byte	This tag allows accessing various system settings on remote unit. Host access status: Full Read/Write access. Settings can be modified at any time. Some of the settings may require hardware reset of the remote RCP unit.
System Thresholds Tag	1	2 Bytes	This tag allows access to the critical unit thresholds. Host access status: Tag have read only status.
System Conditions Tag	3	1 Byte	This tag allows access to the unit's internal conditions flags, such as fault status or current system status. Host access status: Read only. This type of the data can not be set or modified remotely.
ADC Channels Access Tag	4	2 Bytes	ADC legacy access. Don't use for new development
Reserved	6	N/A	This tag is reserved
Reserved	2	N/A	This tag is reserved.
Reserved	5	N/A	This tag is reserved for factory use only
Special Command Tag (v.6.00)	10	N/A	This tag is reserved for factory use only

7.2.2.5 Data Address / Error Status / Local Port Frame Length

This field is a tag extension byte and specifies the first table element of the tagged data. If the Data Length is more than 1 byte, then all subsequent data fields must be accessed starting from the specified address. For example, if the requestor wants to access the amplifier's unique network address, it should set data tag 0 (System settings tag) and data address 8 (see **Table 7-7**, System Settings Details table). If the following Data Length field is more than 1, then all subsequent Settings will be accessed after the Unique Network Address.

Important! In the Response Frame Data Address filed replaced with the Error Status information. The various error codes are given in Table 7-4.

In case of Packet Wrapper request frame (Tag 6), data address field used to specify amount of bytes returned by RCP unit in response frame from local port. Byte collecting from local port starts immediately after wrapped frame being send out. There is no time-out and response frame is not being sent back to host PC until specified amount of bytes collected from Local Port. New request sent by PC host will cancel byte collecting and all collected bytes will be discarded.

Table 7-4: Error Status Byte Values

Error Code name	Byte Value	Possible Cause
No Errors	0	Normal Condition, no errors detected
Data Frame Too Big	1	Specified Data length is to big for respondent buffer to accept
No Such Data	2	Specified Data Address is out off bounds for this tag data
Bad Value	3	Specified value not suitable for this particular data type
Read Only	4	Originator tried to set a value which has read only status
Bad Checksum	5	Trailer checksum not matched to calculated checksum
Unrecognizable error	6	Error presented in originator frame, but respondent failed to recognize it. All data aborted.

7.2.2.6 Data Length

This byte value specifies amount of bytes attached in Data Filed. For Get command it specifies the number of data bytes that has to be returned by RCP unit to a host PC in Response frame. For Set command value of this byte specifies number of data fields to be accessed starting from the address specified in the Data Address byte. In general, Data Length value plus Data Address must not exceed the maximum data size particular tag.

7.2.2.7 Data Field

The actual data contained in the packet must be placed in this field. The “Get Request” type of command must not contain any Data Field. “Get Request” will be rejected if any data is present in the Data Field. Generally, the Bad Checksum error code will be added to the response from the unit. In case the data length is 2 bytes, each data word is placed in the frame with its least significant byte first. All data with length of 2 bytes must be represented as integer type with maximum value range from 32767 to (-32767). Formatting of data bytes for the Packet Wrapper frame is not important for the RCP unit. All data bytes will be redirected to the RCP2 local port without any modification.

7.2.3 Trailer Packet

The trailer component contains only one byte called the Frame Check Sequence. This field provides a checksum during packet transmission. See **Figure 7-7**.

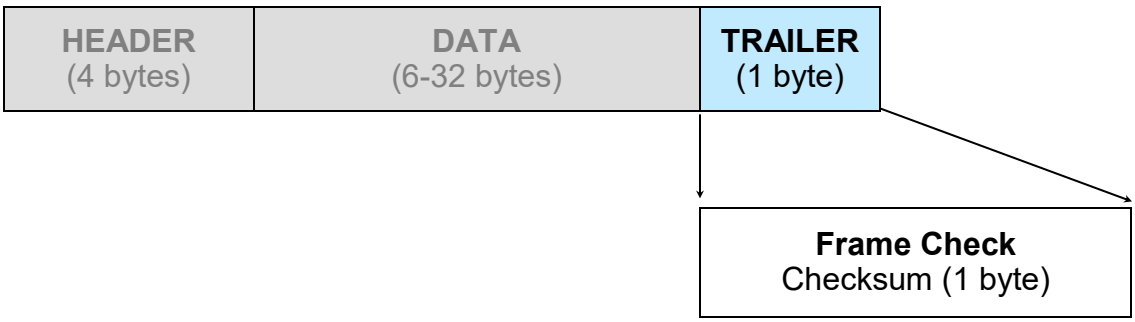

Figure 7-7: Trailer Sub-Packet

7.2.3.1 Frame Check Sequence

This value is computed as a function of the content of the destination address, source address and all Command Data Substructure bytes. In general, the sender formats a message frame, calculates the check sequence, appends it to the frame, then transmits the packet. Upon receipt, the destination node recalculates the check sequence and compares it to the check sequence embedded in the frame. If the check sequences are the same, the data was transmitted without error. Otherwise an error has occurred and some form of recovery should take place. In this case the amplifier will return a packet with the “Bad Checksum” error code set. Checksums are generated by summing the value of each byte in the packet while ignoring any carry bits. A simple algorithm is given as:

```
Chksum=0
FOR byte_index=0 TO byte_index=packet_len-1
      Chksum=(chksum+BYTE[byte_index]) MOD 256
NEXT byte_index
```

7.2.4 Timing issues

There is no maximum specification on the inter-character spacing in messages. Bytes in messages to amplifier units may be spaced as far apart as you wish. The amplifier will respond as soon as it has collected enough bytes to determine the message. Generally, there will be no spacing between characters in replies generated by units. The maximum length of the packet sent to the amplifier node should not exceed 64 bytes, including checksum and frame sync bytes. Inter-message spacing, must be provided for good data transmission. The minimum spacing should be 100 ms. This time is required for the controller to detect a “Line Cleared” condition with half duplex communications. Maximum controller respond time is 200 ms.

7.3 Serial Communications Protocol

Tables 7-5 through **7-9** detail the values of the serial communications protocol.

Table 7-4: Request Frame Structure

Byte	Tag	Description
1	0xAA	Frame Sync 1
2	0x55	Frame Sync 2
3	Destination Address	- // -
4	Source Address	-// -
5	Protocol Version	Protocol Compatibility Byte, must be set 0
6	Request ID	Service Byte
7	Command	0 = Set Request; 1 = Get Request
8	Data Tag	0 = System Settings; 1 = System Thresholds; 2 = Reserved; 3 = Conditions; 4 = ADC Data; 5 = Reserved; 6 = Packet Wrapper
9	Data Address	Setting number, Sensor command, EEPROM address
10	Data Length	Total length of the data, valid values: 1 – 10
11+N	Data	Actual Data
11+N+1	Checksum	Destination Address + Source Address + Protocol Version + Request ID + Command + Data Tag + Data Address + Data Length + Data

Table 7-5:. Response Frame Structure

Byte	Tag	Description
1	0xAA	Frame Sync 1
2	0x55	Frame Sync 2
3	Destination Address	- // -
4	Source Address	-// -
5	Protocol Version	Protocol Compatibility Byte, must be set 0
6	Request ID	Service Byte
7	Command	2 Set Response; 3 Get Response
8	Data Tag	0 System Settings; 1 System Thresholds; 2 Reserved; 3 Conditions; 4 ADC Data; 5 Reserved; 6 Packet Wrapper
9	Error Status	0 – No Errors, 1- Too Big, 2 No Such Data, 3 Bad Value, 4 Read Only, 5 Bad Checksum; 6 Un-recognized Error
10	Data Length	Total length of the data, valid values: 1 – 10
11+N	Data	Actual Data
11+N+1	Checksum	Destination Address + Source Address + Protocol Version + Request ID + Command + Data Tag + Data Address + Data Length + Data

Table 7-7: System Settings Data Values

Data Address	# Bytes	Description	Limits and Byte Values
1	1	System Configuration	0 = 1:2 Controller; 1 = 1:1 Controller; 2 = 1:1 Phase combine; 3 = Dual 1:1 Controller; 4 = Maintenance Mode; 5 = 1:2 Phase combine (v. 6.00)
2	1	Switching mode	0 = Auto Mode; 1 = Manual Mode; 2 = Lock Mode (v. 6.00)
3	1	Control mode	0 = Local; 1 = Remote
4	1	Reserved	N/A
5	1	Priority Select	0 = Pol1; 1 = Pol2
6	1	Communication Protocol*	0 = Normal; 1 = Terminal (v. 4.00)
7	1	Baud Rate*	0 = 9600; 1 = 2400; 2 = 4800; 3 = 19200; 4 = 38400
8	1	Unique network address	Valid values: 0 – 255
9	1	Type of serial interface*	0 = RS232; 1 = RS485; 2 = IPnet; 3 = SNMP (v. 4.00)
10	1	Type of fault monitoring	0 = SSPA only; 1 = LNA only; 2 = Both; 3 = SSPA Com Faults (v. 6.00)
11	1	Auxiliary fault monitoring	0 = Enable non-switching faults; 1 = Ignore; 2 = Enable non-switching faults, inverted logic; 3 = Enable switching faults (v. 6.00); 4 = Enable switching faults, inverted logic (v. 6.00)
12	1	RF Switch Monitoring	0 = Major Fault; 1 = Alert Only; 2 = Alternate (v. 3.30)
13	1	Fault Latching	0 = Latch Enable; 1 = Latch Disable
14	1	Fault Window	0 = 20%; 1 = 8%; 2 = 12%, 3 = 15%
15	1	Fault Logic	0 = Fault on Low; 1 = Fault on High
16	1	User Password	Valid Values=0 to 255
17	1	Amplifier Standby Configuration	0 = Amplifier 2 on Standby (default) 1 = Amplifier 1 on Standby 2 = Amplifier 2 on Standby 3 = Amplifier 3 on Standby
18	1	Buzzer	0 = Enable Buzzer; 1 = Disable Buzzer
19	1	Password Protection	0 = Protection Off; 1 = Protection On
20	1	System Type	0 = None; 1 = Compact Outdoor; 2 = Rack Mount; 4 = vBUC; 5 = SystemX; 6 = PowerMAX (v. 6.00)
21	1	RF Power Units	0 = Measure RF in dBm; 1 = Measure RF in Watts (v. 3.50)
22	1	Reserved	N/A
23	1	LNA/LNB PS Output Voltage	0 = Low range 13V, 900 mA; 1 = High range 17V, 900 mA; 2 = High Power Range 24V, 0.9A/1.5A (Standard/HP version only)
24	1	Standby Mode	0 = Hot Standby; 1 = Cold Standby (v. 6.00)
25	1	Mute State	0 = Mute On; 1 = Mute Pol1 (1:2 only) (v. 6.15), 2 = Mute Pol2 (1:2 only) (v 6.15) 255 = Mute Off
26	1	Remote SSPA Attenuation	Valid Values= 0 to 255 (v. 3.10 dBx10 value)
27	1	Switch Mute	0 = Off; 1 = Internal; 2 = External; 3 = All on (v. 3.30)
28	1	Fault Tolerance	0 = Disabled; 1 = One Fault; 2 = Two Faults (v. 3.70)
29-32	4	IP Address (MSB – LSB)*	Settings required for normal operation of IP interface. Consult network administrator for a proper setup. All settings physically located on the RCP2-1000 unit. Changes to these settings effective only after controller restart. (v. 4.00)
33-35	4	IP Gateway (MSB – LSB)*	
36-40	4	IP Subnet Mask (MSB – LSB)*	
41-42	2	Receive IP Port (MSB – LSB)*	
43-46	4	IP Lock Address (MSB – LSB)*	
47 - 49	3	Individual SSPA Unit Attenuation Offset. Sum of Offset value and Remote SSPA Attenuation value (Data Address 26) must be ≤ 20	Valid Values= 0 to 255 (v. 4.20)

* - Requires hardware reset

Table 7-8: System Condition Data Values

Data Address	# Bytes	Description	Limits and valid values
1	1	Unit 1 Fault state	0 = No Fault; 1 = Fault; 2 = Ignored
2	1	Unit 2 Fault state	0 = No Fault; 1 = Fault; 2 = Ignored
3	1	Unit 3 Fault state	0 = No Fault; 1 = Fault; 2 = Ignored
4	1	Summary Fault	0 = No Fault; 1 = Fault
5	1	Power Supply 1 Fault State	0 = No Fault; 1 = Fault
6	1	Power Supply 2 Fault State	0 = No Fault; 1 = Fault
7	1	Auxiliary input Fault State	0 = No Fault; 1 = Fault; 2 = Ignored
8	1	External Port State	Bit 0-2 = SSPA Input lines Bit 3-8 = Auxiliary Input lines
9	1	LNA Faults	Bit 0 = 1, Faults enabled; Bit 0 = 0, Faults disabled; Bit 1 = 1, Unit 1 Fault; Bit 2 = 1, Unit 2 Fault; Bit 3 = 1, Unit 3 Fault; Bits 1-3 = 0, No Fault
10	1	SSPA Faults	Bit 0 = 1, Faults enabled; Bit 0 = 0, Faults disabled; Bit 1 = 1, Unit 1 Fault; Bit 2 = 1, Unit 2 Fault; Bit 3 = 1, Unit 3 Fault; Bits 1-3 = 0, No Fault
11	1	RF Switch 1 position	1= Switch Fault; 2 = Switch Ignore; 3 = Position 1; 4 = Position 2
12	1	RF Switch 2 position	1= Switch Fault; 2 = Switch Ignore; 3 = Position 1; 4 = Position 2
13-14	2	Forward RF Power (available only with systems equipped with Forward RF power meter)	If Setting RF Power Units = 0, Value x 10dBm; If Setting RF Power Units = 1, Value x 10 W; (See **Table 7-6**, Data Address 21 for details) (-100 for N/A (0xFF9C); Low Byte First (v. 3.10)
15-16	2	Ambient Temperature in (°C) (available only with systems equipped with Forward RF power meter)	Value x 1 °C N/A=0xFF9C (if parameter is not available at present time); Low Byte First (v. 3.10)
17-18	2	Core Temperature of SSPA Unit 1 (available only with systems with remote SSPA control enabled)	Value x 1 °C N/A=0xFF9C (if parameter is not available at present time); Low Byte First (v. 3.10)
19-20	2	Core Temperature of SSPA Unit 2 (available only with systems with remote SSPA control enabled)	Value x 1 °C N/A=0xFF9C (if parameter is not available at present time); Low Byte First (v. 3.10)
21-22	2	Core Temperature of SSPA Unit 3 (available only with systems with remote SSPA control enabled)	Value x 1 °C N/A=0xFF9C (if parameter is not available at present time); Low Byte First (v. 3.10)
23-24	2	Reflected RF Power (available only with systems equipped with Reflected RF power meter)	If Setting RF Power Units = 0, Value x 10dBm; If Setting RF Power Units = 1, Value x 10 W; (See **Table 7-6**, Data Address 21 for details) (-100 for N/A (0xFF9C); Low Byte First (version 3.30)
25-26	2	DC Current (Unit 1 in Amps)	Value x 10 Amp; N/A=0XFF9C; Low Byte First (v. 3.60)
27-28	2	DC Current (Unit 2 in Amps)	Value x 10 Amp; N/A=0XFF9C; Low Byte First (v. 3.60)
29-30	2	DC Current (Unit 3 in Amps)	Value x 10 Amp; N/A=0XFF9C; Low Byte First (v. 3.60)
31-32	2	Forward RF Power (Unit 1 in dBm)	Value x 10 dBm; N/A=0XFF9C; Low Byte First (v. 3.60)
33-34	2	Forward RF Power (Unit 2 in dBm)	Value x 10 dBm; N/A=0XFF9C; Low Byte First (v. 3.60)
35-36	2	Forward RF Power (Unit 3 in dBm)	Value x 10 dBm; N/A=0XFF9C; Low Byte First (v. 3.60)

Table 7-9: System Threshold Data Values

Data Address	# Bytes	Description	Limits and valid values
1	2	LNA Unit 1 Calibration Data	Point conversion: 0.57 mA per 1 value increment, maximum value =4095 (2.3A) (read/write)
2	2	LNA Unit 2 Calibration Data	Point conversion: 0.57 mA per 1 value increment, maximum value =4095 (2.3A) (read/write)
3	2	LNA Unit 3 Calibration Data	Point conversion: 0.57 mA per 1 value increment, maximum value =4095 (2.3A) (read/write)
4	2	LNA Unit 1 DC Current	Point conversion: 0.57 mA per 1 value increment, maximum value =4095 (2.3A) (v6.00) (read only)
5	2	LNA Unit 2 DC Current	Point conversion: 0.57 mA per 1 value increment, maximum value =4095 (2.3A) (v6.00) (read only)
6	2	LNA Unit 3 DC Current	Point conversion: 0.57 mA per 1 value increment, maximum value =4095 (2.3A) (v6.00) (read only)
7	2	LNA Unit 1 DC Voltage	Point conversion: 0.1 V per 1 value increment, maximum value =1023 (v6.00) (read only)
8	2	LNA Unit 2 DC Voltage	Point conversion: 0.1 V per 1 value increment, maximum value =1023 (v6.00) (read only)
9	2	LNA Unit 3 DC Voltage	Point conversion: 0.1 V per 1 value increment, maximum value =1023 (v6.00) (read only)
10	2	PS1 DC Voltage	Point conversion: 0.1 V per 1 value increment, maximum value =1023 (v6.00) (read only)
11	2	PS2 DC Voltage	Point conversion: 0.1 V per 1 value increment, maximum value =1023 (v6.00) (read only)
12	2	RCP2 Chassis Temperature	Value x 1 °C (v6.00) (read only)

7.4 Examples

This section contains several examples of serial data exchange between a host computer and an RCP2-1200 1:2 Redundant Controller. All byte values are given in hexadecimal format. The following controller and system switch positions are used throughout all examples.

- RCP2-1200 Network Address = 0
- Host Computer Network Address = 10
- Request ID = 0x6F

Amplifier Status
Amplifier #1= OK
Amplifier #2= Faulted
Amplifier #3= OK
Power Supply Status
Power Supply #1=OK
Power Supply #2=OK
Auxiliary Fault Inputs = Faulted
RF Switch Status
Switch #1 Position= Position 1
Switch #2 Position = Undetermined or Faulted

7.4.1 Example 1

The host computer requests the RCP2-1200 system conditions. The RCP2-1200 detects no errors in the request frame and issues a response. The PC request string is listed below.

Byte Position	Byte Value (Hex)	Description
1	AA	Frame Sync Byte 1
2	55	Frame Sync Byte 2
3	0	Destination Address of RCP unit
4	A	Source address of Request originating PC Host
5	0	Protocol Version Compatibility Field must always be 0
6	6F	Request ID byte is set by originator, will be echoed back by respondent
7	1	Command field for “Get” type request
8	3	“System Conditions” tag indicates which data from respondent required in response frame
9	1	Data Address field indicates the beginning data address inside of the “System Conditions” data set to 1 (first element)
10	C	Data Length field indicates how many data bytes of the “System conditions” requested from RCP2 (12 is all available data of “System Conditions” type)
11	8A	Arithmetic checksum of bytes number 3 through 10

The RCP2-1200 replies with the following response string.

Byte Position	Byte Value (Hex)	Description
1	AA	Frame Sync Byte 1
2	55	Frame Sync Byte 2
3	A	Destination Address of PC request originator
4	0	Source address of RCP respondent
5	0	Protocol Version Compatibility Field must always be 0
6	6F	Echo of the Originator's Request ID byte
7	3	Command field for "Get" type response
8	3	"System Conditions" tag indicates which data from respondent included in response frame.
9	0	Data Address field omitted and replaced with Error status code. 0 in this field indicates absence of errors.
10	C	Data Length field indicates how many data bytes of the "System conditions" requested from RCP (12 is all available data of "System Conditions" type).
11	0	Data field 1 contains data element 1 of "System Conditions" data type, which is RCP System Unit1 Fault State. 0 Indicates that Unit 1 is not faulted.
12	1	Data field 2 contains data element 2 of "System Conditions" data type, which is RCP System Unit2 Fault State. 1 Indicates that Unit 2 is in fault condition.
13	0	Data field 3 contains data element 3 of "System Conditions" data type, which is RCP System Unit3 Fault State. 0 Indicates that Unit 3 is not faulted.
14	1	Data field 4 contains data element 4 of "System Conditions" data type, which is RCP System Summary Fault State. 1 Indicates presence of faults in the system.
15	0	Data field 5 contains data element 5 of "System Conditions" data type, which is RCP System Power Supply 1 Fault State. 0 Indicates that Power supply 1 is not faulted and functioning properly.
16	0	Data field 6 contains data element 6 of "System Conditions" data type, which is RCP System Power Supply 2 Fault State. 0 Indicates that Power supply 2 is not faulted and functioning properly.
17	1	Data field 7 contains data element 7 of "System Conditions" data type, which is RCP System Auxiliary Fault State. 1 Indicates presence of faults on one of the Auxiliary Inputs.
18	FF	Data field 8 contains data element 8 of the "System Conditions" data type. This data element is reserved for future applications.
19	FF	Data field 9 contains data element 9 of the "System Conditions" data type. This data element is reserved for future applications.
20	FF	Data field 10 contains data element 10 of the "System Conditions" data type. This data element is reserved for future applications.
21	3	Data field 11 contains data element 11 of the "System Conditions" data type, which is RF Switch 1 state. 3 Indicates that RF Switch 1 is in Position 1.
22	1	Data field 12 contains data element 12 of the "System Conditions" data type, which is RF Switch 2 state. 1 Indicates that RF Switch 2 is has a fault condition or its position can't be reliably determined.
23	8F	Arithmetic checksum of bytes number 3 through 22

7.4.2 Example 2

The host computer requests the RCP2-1200 system thresholds. The request string is:

Byte Position	Byte Value (Hex)	Description
1	AA	Frame Sync Byte 1
2	55	Frame Sync Byte 2
3	0	Destination Address of RCP unit
4	A	Source address of Request originating PC Host
5	0	Protocol Version Compatibility Field must always be 0
6	6F	Request ID byte is set by originator, will be echoed back by respondent
7	1	Command field for “Get” type request
8	1	“System Thresholds” indicates which data from respondent is required in response frame
9	1	Data Address field indicates the beginning data address inside of the “System Thresholds” data set to 1 (first element)
10	6	Data Length field indicates how many data bytes of the “System Thresholds” requested from RCP (6 is all available data of “System Thresholds” type)
11	82	Arithmetic checksum of bytes number 3 through 10

The RCP2-1200 replies with the following response string:

Byte Position	Byte Value (Hex)	Description
1	AA	Frame Sync Byte 1
2	55	Frame Sync Byte 2
3	A	Destination Address of PC request originator
4	0	Source address of RCP respondent
5	0	Protocol Version Compatibility Field must always be 0
6	6F	Echo of the Originator’s Request ID byte
7	3	Command field for “Get” type response
8	1	“System Thresholds” indicates which data from respondent is included in response frame
9	0	Data Address field omitted and replaced with Error status code. 0 = no errors.
10	6	Data Length field indicates how many data bytes “System Thresholds” requested from RCP (6 is all available data of “System Thresholds” type)
11	D1	Data field 1 contains least significant byte of data element 1 of “System Thresholds” data type, which is LNA 1 cal. point
12	0	Data field 2 contains most significant byte of data element 1 of “System Thresholds” data type, which is LNA 1 cal. point. Data can be normalized to LNA current as follows: Lna1calpoint * 0.57mA/point = 209* 0.57 = 119.13 mA
13	D8	Data field 3 contains least significant byte of data element 2 of “System Thresholds” data type, which is LNA 2 cal. point
14	0	Data field 4 contains most significant byte of data element 2 of “System Thresholds” data type, which is LNA 2 cal. point. Data can be normalized to LNA current as follows: Lna1 cal point * 0.57mA/point = 216* 0.57 = 123.12 mA
15	DC	Data field 5 contains least significant byte of data element 3 of “System Thresholds” data type, which is LNA3 cal. point.
16	0	Data field 6 contains most significant byte of data element 2 of “System Thresholds” data type, which is LNA 3 cal. Point. Data can be normalized to LNA current as follows: Lna1 cal point * 0.57mA/point = 220* 0.57 = 125.4 mA
17	8	Arithmetic checksum of bytes number 3 through 16

7.4.3 Example 3

The host computer requests the RCP2-1200 network address. The PC request string is listed below.

Byte Position	Byte Value (Hex)	Description
1	AA	Frame Sync Byte 1
2	55	Frame Sync Byte 2
3	FF	Destination Address is broadcast network address
4	10	Source address of Request originating PC Host
5	0	Protocol Version Compatibility Field must always be 0
6	6F	Request ID byte is set by originator, will be echoed back by respondent
7	1	Command field for “Get” type request
8	0	“System Settings” tag indicates which data from respondent required in response frame
9	8	Data Address field indicates the address of the RCP2’s network address inside “System Settings” data set to 8
10	1	Data Length field indicates how many data bytes “System Settings” requested from RCP (1 byte requested)
11	82	Arithmetic checksum of bytes number 3 through 10

The RCP2-1200 replies with the following response string.

Byte Position	Byte Value (Hex)	Description
1	AA	Frame Sync Byte 1
2	55	Frame Sync Byte 2
3	A	Destination Address of PC request originator
4	0	Source address of RCP respondent
5	0	Protocol Version Compatibility Field must be always 0
6	6F	Echo of the Originator’s Request ID byte
7	3	Command field for “Get” type of the response
8	0	“System Settings” indicates which data from respondent is included in response frame
9	0	Data Address field omitted and replaced with Error status code. 0 in this field indicates absence of errors
10	1	Data Length field indicates how many data bytes “System Settings” requested from RCP
11	0	Data field 1 contains data element 8 of “System Settings” data type. “Unique Network Address”=0
12	7D	Arithmetic checksum of bytes number 3 through 11

7.4.4 Example 4

The host computer requests the Priority be set to Polarity #2. The PC request string is listed below.

Byte Position	Byte Value (Hex)	Description
1	AA	Frame Sync Byte 1
2	55	Frame Sync Byte 2
3	0	Destination Address of RCP unit
4	A	Source address of Request originating PC Host
5	0	Protocol Version Compatibility Field must always be 0
6	6F	Request ID byte is set by originator, will be echoed back by respondent
7	0	Command field for “Set” type request
8	0	“System Settings” indicates which data from respondent is required in response frame
9	5	Data Address field indicates the address of the RCP’s Priority Select data element inside “System Settings” (data element 5)
10	1	Data Length field indicates how many data bytes “System Settings” requested from RCP (1 byte requested)
11	1	Data Field 1. 1 Indicates that priority must be set to Pol2
12	7F	Arithmetic checksum of bytes number 3 through 11

The RCP2-1200 replies with the following response string.

Byte Position	Byte Value (Hex)	Description
1	AA	Frame Sync Byte 1
2	55	Frame Sync Byte 2
3	A	Destination Address of PC request originator
4	0	Source address of RCP respondent
5	0	Protocol Version Compatibility Field must always be 0
6	6F	Echo of the Originator’s Request ID byte
7	2	Command field for “Set” type response
8	0	“System Settings” indicates which data from respondent is included in response frame
9	2	Data Address field omitted and replaced with Error status code. 2 indicates “No such data” error
10	1	Data Length field indicates how many data bytes “System Settings” requested from RCP
11	0	Data field 1 contains rejected data
12	7E	Arithmetic checksum of bytes number 3 through 11

7.5 Terminal Mode Serial Protocol

The Teledyne Paradise Datacom RCP Redundant System Controller utilizes Terminal Mode Serial Protocol (TMSP) as a secondary serial protocol for Management and Control through a Remote Serial Interface.

TMSP allows the user to access internal RCP functions via a remote ASCII Terminal or its equivalent (such as HyperTerminal for Windows). TMSP is accomplished through either the RS-232 or RS-485, half duplex, serial communication link.

U.S. ASCII encoded character strings are used to represent commands and data massages. A remote terminal or controller initiates a communication session and the RCP takes action and returns a report of requested status. The RCP will not initiate communication and will transmit data only when commanded to do so. Prior to establishing the session with the RCP, this mode must be enabled through the front panel menu.

The remote terminal must be configured with serial settings that match the RCP's serial port settings. For example, if the RCP is set at 9600 Baud, the remote terminal must be also configured as ASCII terminal at 9600 Baud, no parity, 8 bit data with 1 stop bit serial connection. The RCP will not echo back any incoming characters, so local echo must be enabled on the remote terminal.

To establish a remote control session with the RCP, the user must type "UNIT#XXX" in the terminal window (all letters must be in upper case), where XXX is the RCP's unique network address or the global call address (255). Press the "Enter" key on Remote Terminal keyboard.

The RCP should answer with words "Unit#XXX OnLine" with the first menu screen on the following lines. After a remote session is successfully established, the unit will stay connected as long as needed. The session interface mimics the RCP's front panel menu. To help the user navigate through the menu, the help string with the list of active keys always follows the menu strings.

For example: "Active Keys:(U)p+Enter;(D)own+Enter;(C)lrearFlt; (M)enu+Enter; (E) nd+Enter" will be the last transmission string on all informative menu screens. **NOTE**: All letters must be in upper case!

To refresh current screen on the Remote Terminal simply press "Enter" key. To end a session, press "E" and then the "Enter" key.

Important! If multiple units are networked on the same serial link, **DO NOT ESTABLISH A SESSION WITH MORE THAN ONE UNIT A TIME.** If you do so you will not get a valid response!

The following procedure will guide the user through the remote terminal setup, using the Windows 95/98 HyperTerminal software. The RCP must be connected to a PC com port and configured to use TMSP with 9600 Baud rate prior to setting up the PC configurations.

- Start the Windows HyperTerminal Program (default Windows location at Programs — Accessories — HyperTerminal).
- Enter the name of your serial connection ("Compact Outdoor SSPA" for example), and then click "Ok" button. See **Figure 7-8**.

Figure 7-8: Connection Description

- Select direct connection to the PC communication port (Com1 for example), which meant to be used for communication with RCP unit, and then click "OK" Button. See **Figure 7-9**.

Figure 7-9: Communication Port Selection

- In the next window, select the following as shown in **Figure 7-10**: Bits per Second: 9600; Data bits: 8; Parity: None; Stop bits: 1; Flow control: none. Click “OK”.

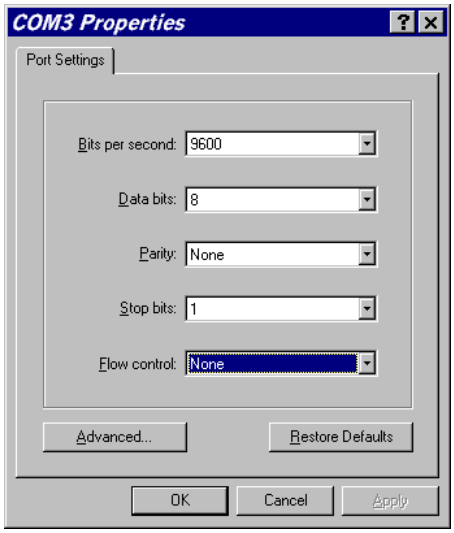

Figure 7-10: Communication Properties

- Normally, the RCP will not echo back characters typed by the user in a Terminal window. For added security and convenience, turn on Local Echo in the HyperTerminal application. To do so, select the following from the HyperTerminal menu: File → Properties → Settings → ASCII setup. This will bring up a window similar to that shown in **Figure 7-11**. In this window, check the box marked “Echo typed characters locally” and click “OK”.

NOTE: Due to a software bug on some versions, this feature may not work. Do not use versions prior to 6.3. Download the latest version of HyperTerminal at http://www.hilgraeve.com.

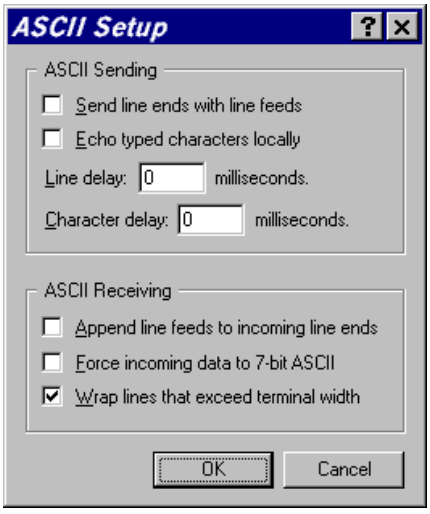

Figure 7-11: ASCII Setup

- Your PC is now configured to work with the RCP in Terminal mode. To establish a session with the RCP, type “UNIT#170”

  Note: When using a RS-485 connection, avoid using the global address (170). Instead, use the unique RCP address.

  An example of a terminal mode session shown on **Figure 7-12**.

```
UNIT#101
Welcome! Unit#101 Online


PS1:Fault  System:Fault  SW1:Fault
PS2:Normal    Aux:Normal SW2:Fault
(B)ack; + EnterlrearFlt;(U)p;(D)own;(M)enu;(E)nd;D



Prtcl:Terminal Intrfc:RS232 Logic:Lo
 Baud:9600    SysAddr:101   Latch:Dis
Active Keys:(C)lrearFlt;(U)p;(D)own;(M)enu;(E)nd;(B)ack; + Enter

D

Track:Ext.   Ctrl:Local  Window(%):8%
Prior:Pol1   Mode:Manual    Buzzer:Dis
Active Keys:(C)lrearFlt;(U)p;(D)own;(M)enu;(E)nd;(B)ack; + Enter

D

LNA/LNB Faults:N/A   PS1Out(V):00.0
   SSPA Faults:None  PS2Out(V):28.4
Active Keys:(C)lrearFlt;(U)p;(D)own;(M)enu;(E)nd;(B)ack; + Enter
```

Figure 7-12: Terminal Mode Example

7.6 Ethernet Interface

7.6.1 Overview

The RCP2 Ethernet port (J9) supports several IP network protocols to provide a full featured remote M&C interface over an Ethernet LAN.

- IPNet protocol — redirection of standard Paradise Datacom LLC serial protocol over UDP transport layer protocol. This protocol is fully supported in Paradise Datacom LLC's Universal M&C software.
- SNMPv1 protocol — protocol intended for integration into large corporate NMS architectures.
- HTTP Web interface — designed to allow platform independent remote control function for a single RCP2 unit

In order to utilize either of the protocols listed above, the relevant interface option has to be turned on. Refer to **Section 7.5.2** (Setting IPNet interface), **Section 7.5.3** (Configure unit to work with SNMP protocol) and **Section 7.5.4** (Web interface).

Of course, standard IP level functions such as ICMP Ping and ARP are supported as well. There is currently no support for dynamic IP parameters settings (DHCP).

7.6.2 IPNet Interface

7.6.2.1 General Concept

Satcom system integrators are recognizing the benefits of an Ethernet IP interface. These benefits include:

- Unsurpassed system integration capabilities;
- Widely available and inexpensive set of support equipment (network cable; network hubs);
- Ability to control equipment over Internet;
- Ease of use

Implementation of the raw Ethernet interface is not practical due to the limitations it places on M&C capabilities by the range of a particular LAN. It is more practical to use an Ethernet interface in conjunction with the standard OSI (Open System Interconnect) model to carry a stack of other protocols. In an OSI layered stack, an Ethernet interface can be represented as a Data Link layer. All upper layers are resolved through a set of IP protocols. In order to keep data bandwidth as low as possible (which is important when M&C functions are provided through a low-bandwidth service channel) the IP/UDP protocol set is used as the Network/Transport layer protocol on Teledyne Paradise Datacom SSPAs.

UDP (User Datagram Protocol) was chosen over TCP (Transmission Control Protocol) because it is connectionless; that is, no end-to-end connection is made between the

RCP2 unit and controlling workstation when datagrams (packets) are exchanged.

Teledyne Paradise Datacom provides a Windows™-based control application to establish UDP-based Ethernet communication with the RCP2. The control application manages the exchange of datagrams to ensure error-free communication. An attractive benefit of UDP is that it requires low overhead resulting in minimal impact to network performance. The control application sends a UDP request to RCP2 unit and waits for response. The length of time the control application waits depends on how it is configured. If the timeout is reached and the control application has not heard back from the agent, it assumes the packet was lost and retransmits the request. The number of the retransmissions is user configurable.

The Teledyne Paradise Datacom RCP2 Ethernet IP interface can use UDP ports from 0 to 65553 for sending and receiving. The receiving port needs to be specified through the front panel menu. For sending, it will use the port from which the UDP request originated. It is up to the user to select an appropriate pair of ports that are not conflicting with standard IP services. Teledyne Paradise Datacom recommends usage of ports 1007, 1038 and 1039. These ports are not assigned to any known application.

As an application layer protocol (which actually carries meaningful data), the standard RCP2 serial protocol was selected. This protocol proves to be extremely flexible and efficient. It is also media independent and can be easily wrapped into another protocol data frame. An example of the UDP frame with encapsulated Teledyne Paradise Datacom protocol frame is shown on **Figure 7-13**.

UDP Header (8 bytes)	**SSPA Serial Protocol Frame** (11+N Bytes, 0<N<128)	**CRC 16** checksum

Figure 7-13: UDP Redirect Frame Example

This set of Ethernet IP protocols is currently supported by Teledyne Paradise Datacom Universal M&C package (RCP2/FPRC/RCPD selection). The software is available for download from the web site, http://www.paradisedata.com.

7.6.2.2 Setting IPNet Interface

All IP-related menu items are consolidated under the following menu: Press the **Main Menu** key; select **2.Com.Setup** and press the **Enter** key; select **5.IPSetup** and press the **Enter** key.

Prior to enabling the Ethernet IP interface, the following IP parameters need to be set: IP Port address, Default Gateway, Subnet Mask, Receive IP Port and IP lock address. The IP Lock address is a security measure. Setting this parameter either to 0.0.0.0 or 255.255.255.255 will allow any host to control the RCP2. Setting the parameter to the specific address of the remote host will lock RCP2 access to this host. Packets received from other hosts will be ignored. For other parameters (IP address, Gateway, Subnet, IP port) contact your network system administrator.

Table 7-10: OSI Model for Ethernet IP Interface

OSI Layer	Protocol	Notes
Application	Paradise Datacom RCP2 Normal serial protocol	Frame structure described in **Section 7.2**
Transport	UDP	Connectionless transport service. MTU on target PC must be set to accommodate largest SSPA Serial Protocol Frame. Set MTU to a value larger than 127 bytes.
Network	IP	ARP, RARP and ICMP Ping protocols supported by RM SSPA controllers. Static IP Address only, no DHCP support.
Data Link	Ethernet	10/100 Base-T Network
Physical	Standard CAT5 (CAT 6) Network Cable	Maximum node length 100 m

Important! If you are planning to access the RCP2 through the Internet, you must exercise the appropriate security measures. It is strongly recommended to put RCP2 units behind a protective Firewall or set up a VPN link for remote access.

After selecting the IP parameters, you may turn on IP interfaces through front panel. Press the **Main Menu** key; select **2.Com.Setup** and press the **Enter** key; select **4.Interface** and press the **Enter** key; select **3.IPNet** and press the **Enter** key.

Once the Ethernet Interface is selected, the RS232/485 Main port is disabled. IP settings may be adjusted when the IPNet interface is turned on as needed without losing IP link. New settings will become effective only after a RCP2 controller hardware reset or power cycle (“Main Menu” > “5.Options” → “5.Reset”).

To disable the Ethernet port and enable the RS232/485 port, press the **Main Menu** key; select **2.Com.Setup** and press the **Enter** key; select **4.Interface** and press the **Enter** key; select either **1.RS232** or **2.RS485** and press the **Enter** key.

Important! At present, the RCP2 controller supports one remote control protocol selection through its Ethernet interface port. This protocol is
referred to as "Normal" on the front panel display (See **Section 3.3.2.1**). If the protocol selection is set to “Terminal”, the controller will force its protocol selection to "Normal".

The Ethernet port can be connected to a network hub through straight through network cable or directly to a work station NIC card through a null-modem or cross-over cable (Rx and Tx lines are crossed). As soon as an Ethernet interface has been selected as the primary interface, you should be able to verify the network connection to the unit by using the Ping command from your host workstation.

To do so on a Windows based PC, open a Command Prompt window and type PING and the dot delimited IP address of the RCP2, then press the Enter key. If the unit is successfully found on the network, the request statistic will be displayed.

```
PING XXX.XXX.XXX.XXX
```

If the unit does not answer on the ping command, check all hardware connections and verify that the IP settings on your host workstation and the RCP2 match your network parameters. On a Windows-based PC you may also check ARP table entries. The new IP address of the RCP2 may be set to another PC or network equipment with a different MAC address. Open a Command Prompt window and type "ARP -a", the press Enter. The current table will be displayed. If you see the RCP2 IP address entry in the table, delete it by issuing the command "ARP -d XXX.XXX.XXX.XXX" and press Enter (XXX.XXX.XXX.XXX is the IP address of the RCP2 unit). Now try the PING command again. More information about how to set up a network connection with the RCP2 can be found in **Appendix A**.

7.6.3 Using the RCP2 Web Interface

Starting with firmware version 6.00, the RCP web interface no longer needs to have a pre-installed Java application to operate. The web interface uses standard hypertext transfer protocol on port 80. The web interface is compatible with most modern web browsers, such as Firefox, Chrome or Internet Explorer, which support asynchronous JavaScript XML transactions (aka AJAX).

To connect to the RCP2 internal web page, the user must make sure Web/IPNet interface is enabled on the device (See **Section 7.6.2.2**) and that an IP address has been assigned to the unit. Connect the unit to an Ethernet network or directly to a PC 10/100 Base-T adapter and then open a web browser.

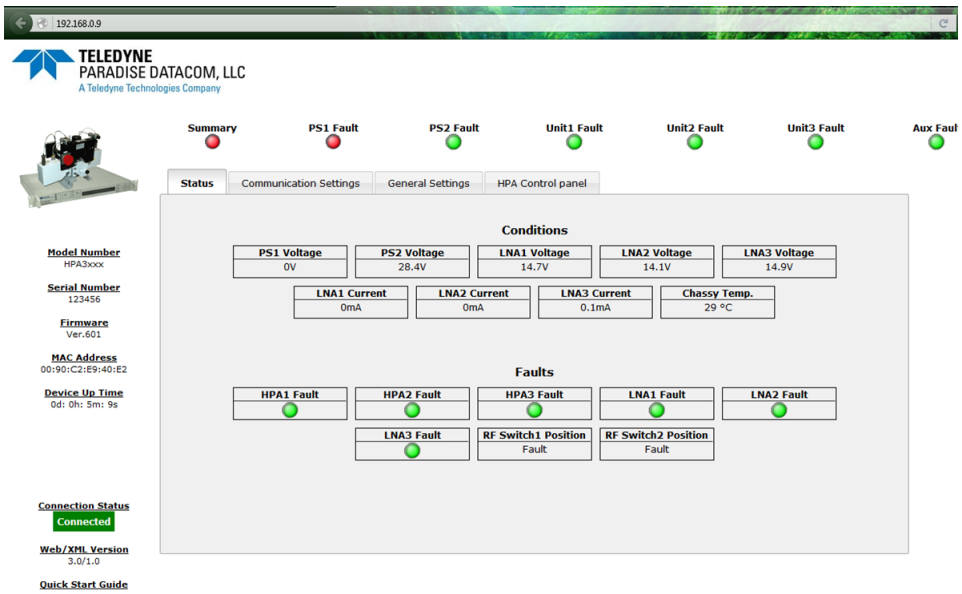

Figure 7-14: Web Interface Screen

Enter the IP address of the unit into the address bar of the browser. A security login window will appear. In the User Name field, enter **admin**, the default User Name. See **Figure 7-15**. The User Name is fixed and cannot be changed by the operator.
In the Password field, enter the web password assigned to the unit. The factory default password is **paradise**. The user name and password are case sensitive. The password may be changed at any time and may comprise up to 15 alpha-numeric characters.

Click on the [Log In] button to open the M&C control in the web browser (**Figure 7-15**).

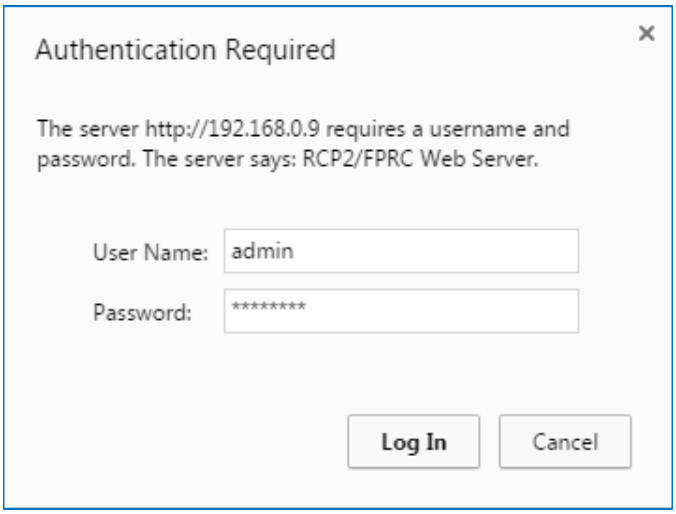

Figure 7-15: Web Interface Login Window

To select another password, enter the following selection on the RCP2 front panel: Press the **Main Menu** key; select **2.Com.Setup** and press the **Enter** key; select **3.IPNet** and press the **Enter** key; select **5.IPConfig** and press the **Enter** key; select **6.More** and press the **Enter** key; select **4.WebPassword** and press the **Enter** key. Use the navigation keys to enter a new password. To erase a character, press and hold the **Up Arrow** (▲) and **Down Arrow** (▼) keys simultaneously.

The top bar of RCP2 Monitor and Control application shows top level fault conditions: Power supply and unit faults as well as Auxiliary fault status.

The left side of the window displays unit model and serial number, firmware build, device MAC address and device up time since last I/O card power up or reboot. Additional information is displayed in multipage insert in the middle of the screen:

- **Status**: A view of all faults and operational parameters.
- **Communication Settings**: This tab provides access to all communication related settings. From here, the user can change the IP settings, Interface, Protocol, Baud Rate, Password and SNMP settings.
- **General Settings**: Read/Write listing of most adjustable RCP parameters. All options are selectable. To set a parameter, select the new value and click the “Confirm” button with the mouse pointer.

- **HPA Control panel**: All information and controls related to remotely control HPA system (if available)

Note: The web server has limited hardware resources to support multiple simultaneously connected users. In the case that multiple users are connected to the same amplifier, service quality cannot be assured.

7.6.4 SNMP Interface

7.6.4.1 Introduction

SNMP-based management was initially targeted for TCP/IP routers and hosts. However, the SNMP-based management approach is inherently generic so that it can be used to manage many types of systems. This approach has become increasingly popular for remote management and control solutions for various SSPA systems.

Teledyne Paradise Datacom devices with Ethernet interface support the most popular SNMPv1 format (SMIv1, RFC1155), SNMP Get, SNMP GetNext and SNMP Set commands. SNMP Traps are currently unsupported.

In order to utilize SNMP protocol, the user has to enable this feature through the front panel or by remote serial protocol. SNMP uses the UDP fixed port 161 for sending and receiving requests.

The definition of managed objects described in MIB. The MIB file is available for download from the Software Downloads section of the Teledyne Paradise Datacom web site, http://www.paradisedata.com.

As with the serial protocol, the RCP2 MIB allows access to a remote SSPA (default state) as well as to the RCP unit itself. To switch between those devices' MIBs, the proper Device Type has to be selected (OID -1.3.6.1.4.1.20712.1.4).

The Teledyne Paradise Datacom MIB is a table-based MIB, and is the same for all devices. The MIB table is designed to follow the same pattern as the tables for serial protocol. For additional information about OID values, refer to **Table 7-11** through **Table 7-13**. The text values in the tables help automatic value parsing within NMS or make the values readable through an MIB browser. All text value OIDs follow the same pattern:

1. For settings or parameters with discreet values:
   SettingName'ValueName1=xxx, ….,ValueNamex=xxx
   Example: ControlMode'Local=0,Remote=1
2. For settings or parameters with continuous values:
   SettingName'LowLimit..HighLimit
   Example: NetworkAddress'0..255

Table 7-11: Detailed Settings

settingIndex/settingValue	*settingTextValue*	*Value OID*	*Description*
1/INTEGER	SysMode'1:2=0,1:1=1,1:1PhC1:1=2,Dual1:1=3,SnglSw=4,PhC1:2=5	1.3.6.1.4.1.20712.2.1.1.1.2.1	System Operation mode
2/INTEGER	SwitchMode'Auto=0,Manual=1	1.3.6.1.4.1.20712.2.1.1.1.2.2	System Switching Mode
3/INTEGER	ControlMode'Local=0,Remote=1	1.3.6.1.4.1.20712.2.1.1.1.2.3	System Control Mode
4/INTEGER	Reserved'0..255	1.3.6.1.4.1.20712.2.1.1.1.2.4	Field reserved for factory use
5/INTEGER	Priority'Pol1=0,Pol2=1	1.3.6.1.4.1.20712.2.1.1.1.2.5	Switching priority
6/INTEGER	Protocol'Normal=0,Terminal=1	1.3.6.1.4.1.20712.2.1.1.1.2.6	Remote serial control protocol
7/INTEGER	Baud'9600=0,2400=1,4800=2,19200=3,38400=4	1.3.6.1.4.1.20712.2.1.1.1.2.7	Baud rate of serial interface
8/INTEGER	NetworkAddress'0..255	1.3.6.1.4.1.20712.2.1.1.1.2.8	Unique network address
9/INTEGER	Interface'RS232=0,RS485=1,IPNet=2,SNMP=3	1.3.6.1.4.1.20712.2.1.1.1.2.9	Type of remote control interface
10/INTEGER	FaultMonitor'SSPA=0,LNA/LNB=1,Both=2,SerCom=3	1.3.6.1.4.1.20712.2.1.1.1.2.10	Type of fault monitoring
11/INTEGER	AuxFaultMonitoring'Off=0,NonSw=1,NoSwInv=2,Sw=3,SwInv=4	1.3.6.1.4.1.20712.2.1.1.1.2.11	Auxiliary fault monitoring
12/INTEGER	RFSwitchFault'Major=0,Alert Only=1,Alternate=2	1.3.6.1.4.1.20712.2.1.1.1.2.12	RF switch fault monitoring
13/INTEGER	FaultLatch'Enable=0,Disable=1	1.3.6.1.4.1.20712.2.1.1.1.2.13	Fault latch
14/INTEGER	FaultWindow'20%=0,8%=1,12%=2,15%=3	1.3.6.1.4.1.20712.2.1.1.1.2.14	LNB/LNA current fault monitoring window
15/INTEGER	FaultLogic'FaultOnLow=0,FaultOnHigh=1	1.3.6.1.4.1.20712.2.1.1.1.2.15	SSPA and Aux fault logic
16/INTEGER	UserPassword'0..255	1.3.6.1.4.1.20712.2.1.1.1.2.16	User menu password
17/INTEGER	StandbyUnit'Default=0,Unit1=1,Unit2=2,Unit3/combine=3	1.3.6.1.4.1.20712.2.1.1.1.2.17	Unit standby select
18/INTEGER	Buzzer'On=0,Off=1	1.3.6.1.4.1.20712.2.1.1.1.2.18	Audible alarm
19/INTEGER	MenuPassword'On=0,Off=1	1.3.6.1.4.1.20712.2.1.1.1.2.19	Menu password state
20/INTEGER	HPASysType'Off=0,CO=1,RM=2,Path=3,VBUC=4,SysX=5,PMAX=6	1.3.6.1.4.1.20712.2.1.1.1.2.20	Type of optional SSPA subsystem
21/INTEGER	RFPowerUnits'dBm=0,Watts=1	1.3.6.1.4.1.20712.2.1.1.1.2.21	Frwd/Reflected power measurement units
22/INTEGER	Reserved'0..255	1.3.6.1.4.1.20712.2.1.1.1.2.22	Field reserved for factory use
23/INTEGER	LNAPSRange'Low=0,High=1,Max=2	1.3.6.1.4.1.20712.2.1.1.1.2.23	LNA PS output voltage range
24/INTEGER	StdbyMode'Hot=0,Cold=1	1.3.6.1.4.1.20712.2.1.1.1.2.24	HPA subsystem standby mode select
25/INTEGER	SubsystemMute'On=0,Pol1=1,Pol2=2,Off=255	1.3.6.1.4.1.20712.2.1.1.1.2.25	SSPA Subsystem mute control
26/INTEGER	SubsystemAttenuation(dBx10)'0..200	1.3.6.1.4.1.20712.2.1.1.1.2.26	SSPA Subsystem attenuation control
27/INTEGER	SwitchMute'Off=0,Internal=1,External=2,All On=3	1.3.6.1.4.1.20712.2.1.1.1.2.27	Switch muting state
28/INTEGER	Reserved'0..255	1.3.6.1.4.1.20712.2.1.1.1.2.28	Field reserved for factory use

Table 7-11: Detailed Settings (continued from previous page)

settingIndex/ settingValue	settingTextValue	Value OID	Description
29/INTEGER	IPAddressByte1'0..255	1.3.6.1.4.1.20712.2.1.1.1.2.29	Device IP address byte1 (MSB)
30/INTEGER	IPAddressByte2'0..255	1.3.6.1.4.1.20712.2.1.1.1.2.30	Device IP address byte2
31/INTEGER	IPAddressByte3'0..255	1.3.6.1.4.1.20712.2.1.1.1.2.31	Device IP address byte3
32/INTEGER	IPAddressByte4'0..255	1.3.6.1.4.1.20712.2.1.1.1.2.32	Device IP address byte4 (LSB)
33/INTEGER	IPGateWayByte1'0..255	1.3.6.1.4.1.20712.2.1.1.1.2.33	Device Gateway address byte1 (MSB)
34/INTEGER	IPGateWayByte2'0..255	1.3.6.1.4.1.20712.2.1.1.1.2.34	Device Gateway address byte2
35/INTEGER	IPGateWayByte3'0..255	1.3.6.1.4.1.20712.2.1.1.1.2.35	Device Gateway address byte3
36/INTEGER	IPGateWayByte4'0..255	1.3.6.1.4.1.20712.2.1.1.1.2.36	Device Gateway address byte4 (LSB)
37/INTEGER	IPSubnetByte1'0..255	1.3.6.1.4.1.20712.2.1.1.1.2.37	Device Subnet Mask byte1 (MSB)
38/INTEGER	IPSubnetByte2'0..255	1.3.6.1.4.1.20712.2.1.1.1.2.38	Device Subnet Mask byte2
39/INTEGER	IPSubnetByte3'0..255	1.3.6.1.4.1.20712.2.1.1.1.2.39	Device Subnet Mask byte3
40/INTEGER	IPSubnetByte4'0..255	1.3.6.1.4.1.20712.2.1.1.1.2.40	Device Subnet Mask byte4 (LSB)
41/INTEGER	IPPortByte1'0..255	1.3.6.1.4.1.20712.2.1.1.1.2.41	Device Port address byte1 (MSB) (required only for IPNet Interface)
42/INTEGER	IPPortByte2'0..255	1.3.6.1.4.1.20712.2.1.1.1.2.42	Device Port address byte2 (LSB) (required only for IPNet Interface)
43/INTEGER	IPLockByte1'0..255	1.3.6.1.4.1.20712.2.1.1.1.2.43	Device IP lock address byte1 (MSB) (required only for IPNet Interface)
44/INTEGER	IPLockByte2'0..255	1.3.6.1.4.1.20712.2.1.1.1.2.44	Device IP lock address byte2 (required only for IPNet Interface)
45/INTEGER	IPLockByte3'0..255	1.3.6.1.4.1.20712.2.1.1.1.2.45	Device IP lock address byte3 (required only for IPNet Interface)
46/INTEGER	IPLockByte4'0..255	1.3.6.1.4.1.20712.2.1.1.1.2.46	Device IP lock address byte4 (LSB) (required only for IPNet Interface)
47/INTEGER	Unit_Offset1’0..255	1.3.6.1.4.1.20712.2.1.1.1.2.47	SSPA Unit 1 Attenuation Offset
48/INTEGER	Unit_Offset2’0..255	1.3.6.1.4.1.20712.2.1.1.1.2.48	SSPA Unit 2 Attenuation Offset
49/INTEGER	Unit_Offset3’0..255	1.3.6.1.4.1.20712.2.1.1.1.2.49	SSPA Unit 3 Attenuation Offset

Table 7-12: Detailed Thresholds

thresholdIndex/ thresholdValue	thresholdTextValue	Value OID	Description
1/INTEGER	LNA1CalibrationPoint(x0.57mA)'0..4095	1.3.6.1.4.1.20712.2.1.2.1.2.1	LNA1 current fault threshold
2/INTEGER	LNA2CalibrationPoint(x0.57mA)'0..4095	1.3.6.1.4.1.20712.2.1.2.1.2.2	LNA2 current fault threshold
3/INTEGER	LNA3CalibrationPoint(x0.57mA)'0..4095	1.3.6.1.4.1.20712.2.1.2.1.2.3	LNA3 current fault threshold
4/INTEGER	LNA1DCCurrent(x0.57mA)'0..4095	1.3.6.1.4.1.20712.2.1.2.1.2.4	LNA1 PS output current
5/INTEGER	LNA2DCCurrent(x0.57mA)'0..4095	1.3.6.1.4.1.20712.2.1.2.1.2.5	LNA2 PS output current
6/INTEGER	LNA3DCCurrent(x0.57mA)'0..4095	1.3.6.1.4.1.20712.2.1.2.1.2.6	LNA3 PS output current
7/INTEGER	LNA1PSVoltage(x0.1V)'0..4095	1.3.6.1.4.1.20712.2.1.2.1.2.7	LNA1 PS output voltage
8/INTEGER	LNA2PSVoltage(x0.1V)'0..4095	1.3.6.1.4.1.20712.2.1.2.1.2.8	LNA2 PS output voltage
9/INTEGER	LNA3PSVoltage(x0.1V)'0..4095	1.3.6.1.4.1.20712.2.1.2.1.2.9	LNA3 PS output voltage
10/INTEGER	PS1Voltage(x0.1V)'0..4095	1.3.6.1.4.1.20712.2.1.2.1.2.10	PS1 output voltage
11/INTEGER	PS2Voltage(x0.1V)'0..4095	1.3.6.1.4.1.20712.2.1.2.1.2.11	PS2 output voltage
12/INTEGER	ChassyTemperature(C)'-99..99	1.3.6.1.4.1.20712.2.1.2.1.2.12	Chassis temperature

Table 7-13: Detailed Conditions

conditionIndex/ conditionValue	conditionTextValue	Value OID
1/INTEGER	Unit1FaultState'NoFault=0,Fault=1,N/A=2	1.3.6.1.4.1.20712.2.1.3.1.2.1
2/INTEGER	Unit2FaultState'NoFault=0,Fault=1,N/A=2	1.3.6.1.4.1.20712.2.1.3.1.2.2
3/INTEGER	Unit3FaultState'NoFault=0,Fault=1,N/A=2	1.3.6.1.4.1.20712.2.1.3.1.2.3
4/INTEGER	SummaryFaultState'NoFault=0,Fault=1	1.3.6.1.4.1.20712.2.1.3.1.2.4
5/INTEGER	PS1FaultState'NoFault=0,Fault=1	1.3.6.1.4.1.20712.2.1.3.1.2.5
6/INTEGER	PS2FaultState'NoFault=0,Fault=1	1.3.6.1.4.1.20712.2.1.3.1.2.6
7/INTEGER	AuxiliaryFaultState'NoFault=0,Fault=1,N/A=2	1.3.6.1.4.1.20712.2.1.3.1.2.7
8/INTEGER	ExternalPortState'0..255	1.3.6.1.4.1.20712.2.1.3.1.2.8
9/INTEGER	LNAFaults'0..255	1.3.6.1.4.1.20712.2.1.3.1.2.9
10/INTEGER	SSPAFaults'0..255	1.3.6.1.4.1.20712.2.1.3.1.2.10
11/INTEGER	RFSwitch1State'NoFault=0,Fault=1,N/A=2,Pos1=3,Pos2=4	1.3.6.1.4.1.20712.2.1.3.1.2.11
12/INTEGER	RFSwitch2State'NoFault=0,Fault=1,N/A=2,Pos1=3,Pos2=4	1.3.6.1.4.1.20712.2.1.3.1.2.12
13/INTEGER	ForwardRFLowByte(0xHLx0.1RFPowerUnits)'0..255	1.3.6.1.4.1.20712.2.1.3.1.2.13
14/INTEGER	ForwardRFHighByte(0xHLx0.1RFPowerUnits)'0..255	1.3.6.1.4.1.20712.2.1.3.1.2.14
15/INTEGER	AmbientTemperatureLowByte(0xHL C)'0..255	1.3.6.1.4.1.20712.2.1.3.1.2.15
16/INTEGER	AmbientTemperatureHighByte(0xHL C)'0..255	1.3.6.1.4.1.20712.2.1.3.1.2.16
17/INTEGER	Unit1TemperatureLowByte(0xHL C)'0..255	1.3.6.1.4.1.20712.2.1.3.1.2.17
18/INTEGER	Unit1TemperatureHighByte(0xHL C)'0..255	1.3.6.1.4.1.20712.2.1.3.1.2.18
19/INTEGER	Unit2TemperatureLowByte(0xHL C)'0..255	1.3.6.1.4.1.20712.2.1.3.1.2.19
20/INTEGER	Unit2TemperatureHighByte(0xHL C)'0..255	1.3.6.1.4.1.20712.2.1.3.1.2.20
21/INTEGER	Unit3TemperatureLowByte(0xHL C)'0..255	1.3.6.1.4.1.20712.2.1.3.1.2.21
22/INTEGER	Uni3TemperatureHighByte(0xHL C)'0..255	1.3.6.1.4.1.20712.2.1.3.1.2.22
23/INTEGER	ReflectedRFLowByte(0xHLx0.1EFPowerUnits)'0..255	1.3.6.1.4.1.20712.2.1.3.1.2.23
24/INTEGER	ReflectedRFHighByte(0xHLx0.1EFPowerUnits)'0..255	1.3.6.1.4.1.20712.2.1.3.1.2.24
25/INTEGER	Unit1DCCurrentLowByte(0xHLx0.1Amper)'0..255	1.3.6.1.4.1.20712.2.1.3.1.2.25
26/INTEGER	Unit1DCCurrentHighByte(0xHLx0.1Amper)'0..255	1.3.6.1.4.1.20712.2.1.3.1.2.26
27/INTEGER	Unit2DCCurrentLowByte(0xHLx0.1Amper)'0..255	1.3.6.1.4.1.20712.2.1.3.1.2.27
28/INTEGER	Unit2DCCurrentHighByte(0xHLx0.1Amper)'0..255	1.3.6.1.4.1.20712.2.1.3.1.2.28
29/INTEGER	Unit3DCCurrentLowByte(0xHLx0.1Amper)'0..255	1.3.6.1.4.1.20712.2.1.3.1.2.29
30/INTEGER	Unit3DCCurrentHighByte(0xHLx0.1Amper)'0..255	1.3.6.1.4.1.20712.2.1.3.1.2.30
31/INTEGER	Unit1RFOutputLowByte(0xHLx0.1dBm)'0..255	1.3.6.1.4.1.20712.2.1.3.1.2.31
32/INTEGER	Unit1RFOutputLowByte(0xHLx0.1dBm)'0..255	1.3.6.1.4.1.20712.2.1.3.1.2.32
33/INTEGER	Unit2RFOutputLowByte(0xHLx0.1dBm)'0..255	1.3.6.1.4.1.20712.2.1.3.1.2.33
34/INTEGER	Unit2RFOutputLowByte(0xHLx0.1dBm)'0..255	1.3.6.1.4.1.20712.2.1.3.1.2.34
35/INTEGER	Unit3RFOutputLowByte(0xHLx0.1dBm)'0..255	1.3.6.1.4.1.20712.2.1.3.1.2.35
36/INTEGER	Unit3RFOutputLowByte(0xHLx0.1dBm)'0..255	1.3.6.1.4.1.20712.2.1.3.1.2.36

7.6.4.2 SNMP V3 Issues in Teledyne Paradise Datacom RCP2 Controller

Simple Network Management Protocol (SNMP) is an interoperable standards-based protocol that allows for external monitoring of the Content Engine through an SNMP agent.

A SNMP-managed network consists of three primary components: managed devices, agents, and management systems. A managed device is a network node that contains a SNMP agent and resides on a managed network. Managed devices collect and store management information and use SNMP to make this information available to management systems that use SNMP. Managed devices include routers, servers, switches, bridges hubs, computer hosts, and printers.

An agent is a software module that has local knowledge of management information and translates that information into a form compatible with SNMP: the Management Information Base (MIB). The agent can send traps, or notification of certain events, to the manager. Essentially, a Teledyne Paradise Datacom SSPA is considered a “SNMP agent”.

A manager is a software module that listens to the SNMP notifications sent by SNMP agents. The manager can also send requests to an agent to collect remote information from the Management Information Base (MIB).

The communication between the agent and the manager uses the SNMP protocol, which is an application of the ASN.1 BER (Abstract Syntax Notation 1 with Basic Encoding Rules), typically over UDP (for IP networks).

- Version 1 (SNMPv1, described in RFC 1157) is the initial implementation of SNMP.
- Version 2 (SNMPv2c, described in RFC 1902) is the second release of SNMP. It provides additions to data types, counter size, and protocol operations.
- Version 3 (SNMPv3, described in RFC 2271 through RFC 2275) is the most recent version of SNMP.

SNMP V1

SNMP version 1 (SNMPv1) is the initial implementation of the SNMP protocol. SNMPv1 operates over protocols such as User Datagram Protocol (UDP), Internet Protocol (IP), OSI Connectionless Network Service (CLNS), AppleTalk Datagram- Delivery Protocol (DDP), and Novell Internet Packet Exchange (IPX). SNMPv1 is widely used and is the de-facto network-management protocol in the Internet community.

The Teledyne Paradise Datacom RCP2 family of products utilizes the most popular implementation, SNMP V1 over UDP transport layer.

SNMP V2

SNMPv2 (RFC 1441–RFC 1452) revises version 1 and includes some improvements in the areas of performance, security, confidentiality, and manager-to-manager communications. It introduced GetBulkRequest, an alternative to iterative GetNextRequests for retrieving large amounts of management data in a single request.

However, the new party-based security system in SNMPv2, viewed by many as overly complex, was not widely accepted.

The format of the trap message was also changed in SNMPv2. To avoid these compatibility issues, the trap mechanism was not implemented in the Teledyne Paradise Datacom SSPA MIB.

SNMP V3

Although SNMPv3 makes no changes to the protocol aside from the addition of cryptographic security, it looks much different due to new textual conventions, concepts, and terminology. SNMPv3 primarily added security and remote configuration enhancements to SNMP. Many embedded controllers and microprocessors that are used in electronic components such as amplifier modules do not have support for SNMP V2 or V3. This is due to the extensive memory resources required by the computation intensive cryptographic security of SNMP V3.

For this reason V3 has not gained widespread support amongst embedded MCU platform manufacturers. Existing port implementations are limited to very powerful ARM5 or above cores, running under full-scale OS systems (Linux, Android, etc.). At large, these configurations require external bulk RAM/FLASH to operate. This requirement ultimately affects the minimum device startup time (tens of seconds, due to the large boot BIOS) and working temperature range (mostly indoor).

As noted in Cisco's release notes about SNMP V3:

> SNMP notifications can be sent as traps or inform requests. Traps are unreliable because the receiver does not send acknowledgments when this device receives traps. The sender cannot determine if the traps were received. However, an SNMP entity that receives an inform request acknowledges the message with an SNMP response protocol data unit (PDU). If the sender never receives the response, the inform request can be sent again. Therefore, informs are more likely to reach their intended destination.
>
> However, informs consume more resources in the agent and in the network. Unlike a trap, which is discarded as soon as it is sent, an inform request must be held in memory until a response is received, or the request times out. Traps are sent only once, while an inform can be retried several times. The retries increase traffic and contribute to a higher overhead on the network.

(http://www.cisco.com/c/en/us/support/docs/ip/simple-network-management-protocol-snmp/13506-snmp-traps.html, last visited on 22 January 2015.)

7.6.4.3 SNMP MIB Tree

```
--paradiseDatacom(1.3.6.1.4.1.20712)
  |
  +--deviceINFO(1)
  |  |
  |  +-- r-n OctetString deviceID(1)
  |  +-- rwn OctetString deviceLocation(2)
  |  +-- r-n OctetString deviceRevision(3)
  |  +-- r-n Enumeration deviceType(4)
  |
  +--devices(2)
     |
     +--paradiseDevice(1)
     |  |
     |  +--settings(1)
     |  |  |
     |  |  +--settingsEntry(1) [settingIndex]
     |  |     |
     |  |     +-- rwn Integer32   settingIndex(1)
     |  |     +-- rwn Integer32   settingValue(2)
     |  |     +-- r-n OctetString settingTextValue(3)
     |  |
     |  +--thresholds(2)
     |  |  |
     |  |  +--thresholdsEntry(1) [thresholdIndex]
     |  |     |
     |  |     +-- rwn Integer32   thresholdIndex(1)
     |  |     +-- r-n Integer32   thresholdValue(2)
     |  |     +-- r-n Enumeration thresholdStatus(3)
     |  |     +-- r-n OctetString thresholdText(4)
     |  |
     |  +--conditions(3)
     |     |
     |     +--conditionsEntry(1) [conditionsIndex]
     |        |
     |        +-- rwn Integer32   conditionsIndex(1)
     |        +-- r-n Integer32   conditionsValue(2)
     |        +-- r-n Counter     conditionsEventCount(3)
     |        +-- r-n OctetString conditionsText(4)
     |
     +--paradiseDeviceA(2)
     |
     +--paradiseDeviceB(3)
     |
     +--paradiseDeviceC(4)
     |
     +--modem(5)
```

7.6.4.4 Description of MIB Entities

deviceINFO — This field includes general device information.

deviceID — Octet string type; maximum length -60; field specifies device model and serial number; read only access; OID -1.3.6.1.4.1.20712.1.1

deviceLocation — Octet string type; maximum length 60; filed allow customer to store information about device physical location or any other textual information related to the device; read/write access; OID -1.3.6.1.4.1.20712.1.2

deviceRevision — Octet string type; maximum length 60; field specifies device firmware revision; read only access; OID -1.3.6.1.4.1.20712.1.3

deviceType — Enumeration, integer type; field allows simple detection of SNMP device type. Values: rmsspa(1), cosspa(2), rcp2fprc(3), rcp21000rm(4), rcp21000co(5), rcp21000rcp(6), buc(7), rbc(8), minicosspa(9); read/write access. Setting the ID to any other value will default type to cosspa. OID -1.3.6.1.4.1.20712.1.4

devices — This field is subdivided into 5 branches: paradiseDevice, paradiseDeviceA, paradiseDeviceB, paradiseDeviceC and modem. The paradiseDevice branch currently is used for all Paradise Datacom LLC SNMP enabled device except Modem. See the Evolution Modem manual for specific MIB information for modems. Branches for Device A, B and C are reserved for future use.

paradiseDevice — Field contents tables hold specific device information: Settings, Thresholds and Conditions. All table formats follow a common pattern: Index, Value, TextValue. The threshold table has an additional column for parameter validation. The conditions table has an extra column for event counters.

The Index column provides general table indexing; the Value column presents the current value of the relevant parameter; the TextValue column provides information about parameter name, measurement units and limits.

Value “1” in the validation column of the thresholds table indicates that relevant parameter is valid under the current system configuration; value “2” indicates that parameter is invalid or “Not available”.

The event counter column of the conditions table indicates how many times a value of a relevant parameter changed its state since system power-up.

settings — Table contents current device configuration and provides device management. For detailed settings table info for SNMP device see **Table 7-11** . Read/write access for settingsValue column.

thresholds — Table provides information about device internal limits and subsystems info. For detailed table information refer to **Table 7-12**. Read only access.

conditions — Table contents device fault status information. Read only access. For detailed conditions table info see **Table 7-13**.

7.6.4.5 Configuring RCP2 Unit to Work With SNMP Protocol

1. Set up the unit IP address. Press the **Main Menu** key on the front panel; select **2.Com.Setup** and press the **Enter** key; select **5.IP Setup** and press the **Enter** key; select **2.LocalIP** and press the **Enter** key. Use the navigation keys to adjust the unit IP address. A single controller in a system has a default address of **192.168.0.9**. Press the **Enter** key when complete;
2. Set up the unit gateway address. Press the **Main Menu** key; select **2.Com.Setup** and press the **Enter** key; select **5.IP Setup** and press the **Enter** key; select **4.Gateway** and press the **Enter** key. Use the navigation keys to adjust the unit gateway address. If no gateway is needed, set the address to 0.0.0.0. Press the **Enter** key when complete;
3. Set up the unit subnet mask. Press the **Main Menu** key; select **2.Com.Setup** and press the **Enter** key; select **5.IP Setup** and press the **Enter** key; select **3.Subnet** and press the **Enter** key. Use the navigation keys to adjust the unit subnet mask. Press the **Enter** key when complete;
4. Set up the unit Community Set and Get strings. Press the **Main Menu** key; select **2.Com.Setup** and press the **Enter** key; select **5.IP Setup** and press the **Enter** key; select **6.More** and press the **Enter** key; select **1.CommunitySet** (or **2.CommunityGet**). Using the navigation keys to adjust the unit community strings information. Press and hold the key for typematic option. Press the **Enter** key when complete. To erase unwanted characters, press and hold the **Down Arrow** (▼) key and then press the **Up Arrow** (▲);
5. Set up the unit interface to SNMP. Press the **Main Menu** key; select **2.Com.Setup** and press the **Enter** key; select **4.Interface** and press the **Enter** key; select **4.SNMP** and press the **Enter** key.
6. SNMP protocol now is set and ready to be used.

7.6.4.5 Connecting to a MIB Browser

For a MIB browser application example, we will use the freeware browser GetIf, version 2.3.1. Other browsers are available for download from http://www.snmplink.org.

1. Copy the provided Paradise Datacom LLC MIB file into the Getif Mibs sub-folder. The MIB is available for download at http://www.paradisedata.com.
2. Start the GetIf application.
3. Select the unit IP address and community strings in the relevant text boxes on the Parameters tab (see **Figure 7-16**) and then click the Start button.

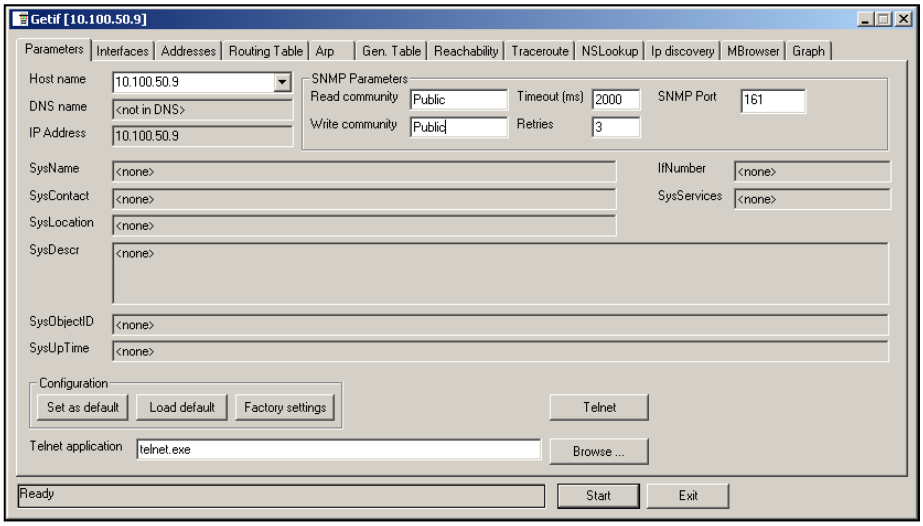

Figure 7-16: GetIF Application Parameters Tab

4. Select the MIBBrowser tab.
5. Click on ‘iso main entity’ on the MIB tree, then click the Start button.
6. See update data in output data box (**Figure 7-17**).

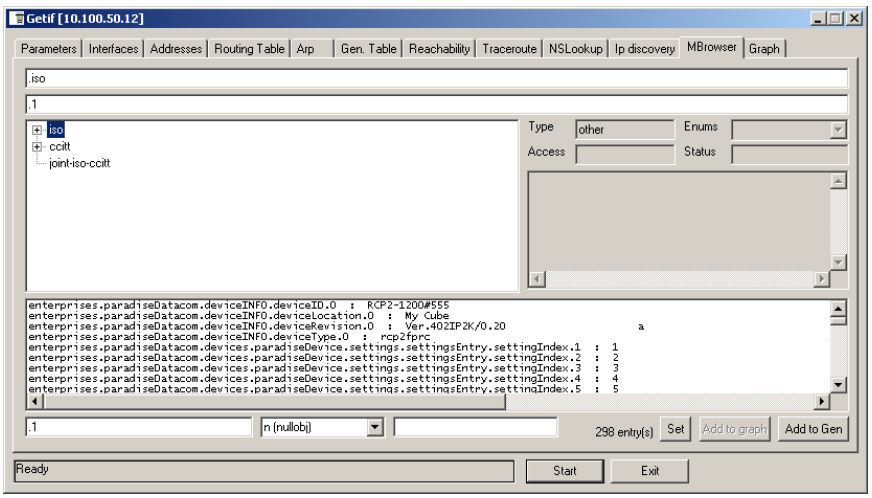

Figure 7-17: Getif MBrowser Window, with Update Data in Output Data Box

7.6.5 Extended SNMP Operation

The RCP2 controller is equipped with a DigitalCore5 control board and utilizes firmware version 6.00 and above. These units feature an extended SNMP MIB and support SNMP traps. This extended MIB covers several OID objects related to SNMP trap functions.

These units allow independent functioning of two SNMP traps (asynchronous notifications): Fault trap and Conditions trap. Both traps can be enabled or disabled by the operator. The operator can also specify how many times the same trap notification will be sent back to the SNMP manager.

The SNMP manager IP address is also selectable by the operator. This IP address must be specified in the relevant OID branch.

Every trap message is marked by the fixed trap community string “trap”. This community name is not user selectable.

7.6.5.1 Fault Trap

The Fault trap allows asynchronous notification of the RCP2 fault state change. When enabled, trap notification will be sent to a manager every time either the summary fault state or a fault type is changed.

The Last Fault Time ticks counter will be reset each time the summary fault changes its state to “Alarm” or when a new fault condition is detected. This counter also resets itself during device power-up. If no faults are present after device power-up, Fault Trap will issue a “Cold Start” notification to the manager.

7.6.5.2 Condition Trap

The Condition Trap allows the unit to generate asynchronous notifications independent from the unit fault state. Currently, the following conditions can be used for this trap triggering: Forward RF Level (each remotely controlled HPA or System RF level can be selected), Reflected RF Level (for systems equipped with a Reflected RF sensor), DC Current level (each remotely controlled HPA can be selected), PS Voltage level (both internal PS units can be selected), Temperature (each remotely control HPA can be selected or Ambient temperature sensor, if equipped), or LNA/LNB current.

To enable this trap, set the Condition Trap Resend option to a non-zero value and determine the upper and lower limits for the condition window. Window values must be selected according to the relevant selected condition measured by the unit.

For example: Temperature must be selected in degrees, RF power in tenth of dBms, etc. After successful configuration, the controller will generate a notification every time the selected condition is outside the selected measurement window. For units with multiple measured parameters, the relevant condition location must be selected (i.e., units with two power supplies use 1 for PS1, and 2 for PS2).

For other conditions, this value is “don’t care”. Both traps will send a “Device Up Time” time stamp with every trap notification.

7.6.5.3 Extended SNMP MIB Tree

```
--paradiseDatacom(1.3.6.1.4.1.20712)
|
+--deviceINFO((1.3.6.1.4.1.20712.1)
| |
| +-- r-n OctetString deviceID(1.3.6.1.4.1.20712.1.1)
| +-- rwn OctetString deviceLocation(1.3.6.1.4.1.20712.1.2)
| +-- r-n OctetString deviceRevision(1.3.6.1.4.1.20712.1.3)
| +-- r-n Enumeration deviceType(1.3.6.1.4.1.20712.1.4)
| +--deviceTimeTicks(1.3.6.1.4.1.20712.1.5)
| | |
| | +-- r-n TimeTicks deviceUpTime(1.3.6.1.4.1.20712.1.5.1)
| | +-- r-n TimeTicks deviceFaultTime(1.3.6.1.4.1.20712.1.5.2)
| |
| +--deviceCounters(1.3.6.1.4.1.20712.1.6)
| | |
| | +-- r-n Counter deviceSFaultCounter(1)
| |
| +--deviceFaultState(1.3.6.1.4.1.20712.1.7)
| | |
| | +-- r-n Enumeration deviceSummaryFault(1)
| | +-- r-n Enumeration deviceLastFault(2)
| |
| +--deviceTrapedCondition(1.3.6.1.4.1.20712.1.8)
| | |
| | +-- r-n Integer32 deviceTrappedConditionValue(1)
| |
| +--deviceTrapControl(1.3.6.1.4.1.20712.1.9)
| | |
| | +-- rwn IpAddress deviceManagerIP(1)
| | +-- rwn Integer32 deviceFaultsTrapResend(2)
| | +-- rwn Integer32 deviceConditionTrapResend(3)
| | +-- rwn Enumeration deviceConditionToMonitor(4)
| | +-- rwn Integer32 deviceConditionULimit(5)
| | +-- rwn Integer32 deviceConditionLLimit(6)
| | +-- rwn Integer32 deviceConditionLocation(7)
| |
| +--deviceTraps(1.3.6.1.4.1.20712.1.10)
| |
| +-- (1.3.6.1.4.1.20712.1.10.0)
| |
| +--deviceFaultsTrap(1.3.6.1.4.1.20712.1.10.0.11)
| [deviceUpTime,deviceSummaryFault,deviceLastFault]
| |
| +--deviceConditionTrap(1.3.6.1.4.1.20712.1.10.0.12)
| [deviceUpTime,deviceConditionToMonitor,deviceTrappedConditionValue]
```

(continued)

```
|
+--devices(2)
|
+--paradiseDevice(1)
| |
| +--settings(1)
| | |
| | +--settingsEntry(1) [settingIndex]
| | |
| | +-- rwn Integer32 settingIndex(1)
| | +-- rwn Integer32 settingValue(2)
| | +-- r-n OctetString settingTextValue(3)
| |
| +--thresholds(2)
| | |
| | +--thresholdsEntry(1) [thresholdIndex]
| | |
| | +-- rwn Integer32 thresholdIndex(1)
| | +-- r-n Integer32 thresholdValue(2)
| | +-- r-n Enumeration thresholdStatus(3)
| | +-- r-n OctetString thresholdText(4)
| |
| +--conditions(3)
| |
| +--conditionsEntry(1) [conditionsIndex]
| |
| +-- rwn Integer32 conditionsIndex(1)
| +-- r-n Integer32 conditionsValue(2)
| +-- r-n Counter conditionsEventCount(3)
| +-- r-n OctetString conditionsText(4)
|
+--paradiseDeviceA(2)
|
+--paradiseDeviceB(3)
|
+--paradiseDeviceC(4)
|
+--modem(5)
```

7.6.5.4 Extended SNMP MIB Tree Elements in Detail

deviceRevision — Octet string type; maximum length 60; field specifies device firmware revision; read only access; OID -1.3.6.1.4.1.20712.1.3

deviceUpTime — Device total up time in hundredths of a second; OID - 1.3.6.1.4.1.20712.1.5.1

deviceFaultTime — Time elapsed since last state change of deviceLastFault parameter in hundredths of second; OID - 1.3.6.1.4.1.20712.1.5.2

deviceSFaultCounter — Counts number of Summary alarms since device power up; OID - 1.3.6.1.4.1.20712.1.6.1

deviceSummaryFault — Enumerated value of device last detected fault condition. The following enumerated values are possible: coldStart(1), overTemp(2), badRegltr(3), lowDCCur(4), aux(5), buc(6), lna(7), hpa(8), lowFwdRF(9), highRefRF(10), nPlusOne (11), badPS(12), timeOut(13), other(14), noFaults(15). OID - 1.3.6.1.4.1.20712.1.7.1

deviceTrappedConditionValue — Condition value trapped by deviceConditionTrap; OID - 1.3.6.1.4.1.20712.1.8.1

deviceManagerIP — Trap recipient IP address; OID - 1.3.6.1.4.1.20712.1.9.1

deviceFaultsTrapResend — Defines how many times deviceFaultsTrap will repeat the message. 0 - Disables trap triggering; OID - 1.3.6.1.4.1.20712.1.9.2

deviceConditionTrapResend — Defines how many times condition trap will repeat the message. 0 - Disables trap triggering; OID - 1.3.6.1.4.1.20712.1.9.3

deviceConditionToMonitor — Enumerated value. Object defines which condition to trap. The following enumerations are possible: fwdRF(1), dcCurrent(2), voltagePS(3), temperature(4), lnaCur(5), refRF(6); OID - 1.3.6.1.4.1.20712.1.9.4

deviceConditionULimit — Conditions upper trap limit. Trap will be sent when the condition exceeds this limit. OID - 1.3.6.1.4.1.20712.1.9.5

deviceConditionLLimit — Conditions lower trap limit. Trap will be sent when condition falls below this limit. OID - 1.3.6.1.4.1.20712.1.9.6

deviceConditionLocation — Parameter specifying condition measuring location in device containing multiple location of the same type (multiple PS, HPAs, LNAs etc.). Set to 0 for system-wide conditions, 1 .. n for relevant unit. For devices with single condition location parameter is “don’t care”, for system wide parameters (System RF power, Ambient temperature etc. select 4). OID - 1.3.6.1.4.1.20712.1.9.7

deviceFaultsTrap — Trap fires deviceFaultsTrapResend times when deviceLastFault or deviceSummaryFault state changes. OID - 1.3.6.1.4.1.20712.1.10.0.11

THIS PAGE LEFT INTENTIONALLY BLANK

8.0 Introduction

Teledyne Paradise Datacom offers the option of utilizing the RCP2-1100 controller as a Maintenance Switch Controller, which controls the position of a single waveguide switch.

A Maintenance Switch Controller is typically connected to the switch drive via a single cable. With systems using amplifiers of certain high power levels, the controller could also be connected to the system SSPAs, so that the output of the amplifiers can be temporarily muted during switchover to prevent arcing in the transmission line.

8.1 Operation Modes

The Maintenance Switch Controller controls the position of a switch at the output of the connected amplifier or amplifier system. The position of the switch determines whether the output signal of the amplifier or amplifier system is directed to a dummy load (the maintenance position), or to the system output.

8.1.1 Directing the Output Signal to the System Output

When the operator presses the **POS1** key on the controller front panel, the switch is set to its primary position. The LED on the **POS1** key will illuminate and the LEDs in the mimic path display will show the signal directed to the system output. See **Figure 8-1**.

Figure 8-1: POS1 key to direct output signal to system output

8.1.2 Directing the Output Signal to the Dummy Load

When the operator presses the **POS2** key on the controller front panel, the switch is set to its secondary position. The LED on the **POS2** key will illuminate and the LEDs in the mimic path display will show the signal directed to the termination. See **Figure 8-2**.

Figure 8-2: POS2 key to direct output signal to dummy load

8.2 Application of a Maintenance Switch Controller

Figure 8-3 shows a typical schematic for a standalone amplifier (HPA 1) utilizing a maintenance switch (SW1) at its output, and a Maintenance Switch Controller.

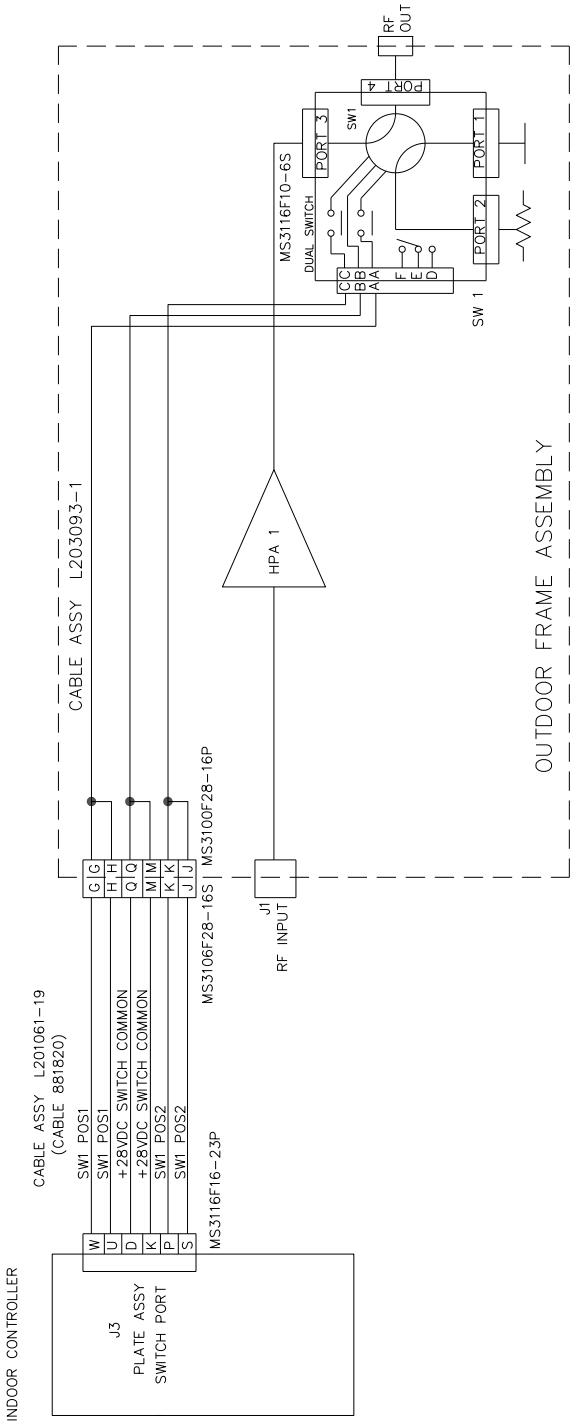

Figure 8-3: Schematic, SSPA utilizing Maintenance Switch and Controller

This section describes the procedure for setting up the Ethernet IP interface through the RCP front panel interface. It also describes basic network setup of a Windows based host PC for a peer-to-peer network connection with the RCP unit.

Important! Do not use a crossover cable to connect to the network hub, use crossover only for direct PC-to-RCP connection!

1. Connect J6 Ethernet Port of the RCP controller to a host PC through a crossover null-modem network cable (see Appendix C) for wiring details.

2. If the PC NIC card has not previously been set, do so now using the following procedure, otherwise skip to Step 3.

2.1 From Windows Control Panel select Network icon;

2.2 Select TCP/IP properties of your LAN card. The window shown in **Figure A-1** will appear:

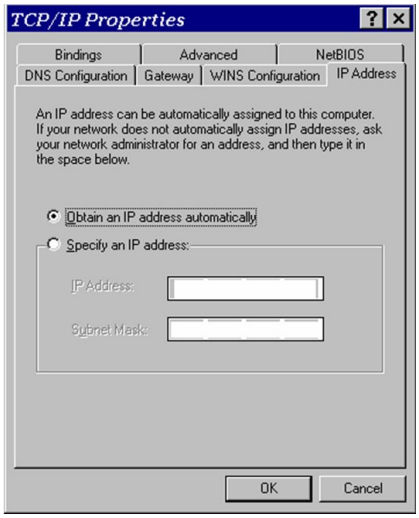

Figure A-1: TCP/IP Properties Window

2.3 Select "Specify an IP Address". And enter the following parameters in the IP address and Subnet fields:

```
IP Address:        192.168.0.3
Subnet Mask:       255.255.255.0
```

After you press "OK", depending on the operating system, you may need to reboot the workstation.

2.4 After optional reboot, open the Command Prompt console window and enter:

```
C:\>IPCONFIG
```

This will display the IP settings:

```
0 Ethernet Adapter:
IP Address:    192.168.0.3
Subnet Mask:   255.255.255.0
Default Gateway:
```

2.5 You can now try to Ping your PC:

In Command Prompt window enter the following:

```
C:\>ping 192.168.0.3
```

This will display:

```
Pinging 192.168.0.3 with 32 bytes of data:
Reply from 192.168.0.3: bytes=32 time<10ms TTL=128
Reply from 192.168.0.3: bytes=32 time<10ms TTL=128
Reply from 192.168.0.3: bytes=32 time<10ms TTL=128
Reply from 192.168.0.3: bytes=32 time<10ms TTL=128
Ping statistics for 192.168.0.3:
                  Packets: Sent=4, Received=4, Lost=0 (0%loss),
                  Approximate round trip times in milli-seconds:
                  Minimum=0ms, Maximum=0ms, Average=0ms
```

Your network LAN card is now set up.

3. On the RCP unit front panel, perform the following sequence:

Press the **Main Menu** key; select **2.Com.Setup** and press the **Enter** key; select **5.IPSetup** and press the **Enter** key; select **2.LocalIP** and press the **Enter** key. Enter the address **192.168.0.0** by using the navigation keys. Press the **Enter** key to accept the entered value.

Use the same menu pattern above to set the following parameters:

Subnet: 255.255.255.0;
Gateway: 0.0.0.0;
IPLock: 255.255.255.255;
IPPort: 1038.

Verify the selected parameters by navigating to the **1.IPInfo** screen.

4. On the RCP unit front panel select sequentially:

Press the **Main Menu** key; select **2.Com.Setup** and press the **Enter** key; select **4.Interface** and press the **Enter** key; select **3.IPNet** and press the **Enter** key.

The RCP unit is now set up to work with Ethernet Interface. You may now ping the RCP unit from the host PC:

```
C:\>ping 192.168.0.0
```

This will display:

```
Pinging 192.168.0.0 with 32 bytes of data:
Reply from 192.168.0.0: bytes=32 time<10ms TTL=128
Reply from 192.168.0.0: bytes=32 time<10ms TTL=128
Reply from 192.168.0.0: bytes=32 time<10ms TTL=128
Reply from 192.168.0.0: bytes=32 time<10ms TTL=128
Ping statistics for 192.168.0.3:
            Packets: Sent=4, Received=4, Lost=0 (0%loss),
            Approximate round trip times in milli-seconds:
            Minimum=0ms, Maximum=0ms, Average=0ms
```

5. Run the Teledyne Paradise Datacom Universal M&C package on the host PC to check all M&C functions. Refer to **Appendix E** for details. When prompted, select an Internet connection to the unit using IP Address 192.168.0.0, local port address to 1039 and remote port address to 1038. The RCP is now connected to your host work-station for remote M&C.

THIS PAGE LEFT INTENTIONALLY BLANK

Appendix B: Proper 10/100 Base-T Ethernet Cable Wiring

This section briefly describes the basic theory related to the physical layer of 10/100 Base-T networking, as well as proper wiring techniques.

There are several classifications of cable used for twisted-pair networks. Recommended cable for all new installations is Category 5 (or CAT 5). CAT 5 cable has four twisted pairs of wire for a total of eight individually insulated wires. Each pair is color coded with one wire having a solid color (blue, orange, green, or brown) twisted around a second wire with a white background and a stripe of the same color. The solid colors may have a white stripe in some cables. Cable colors are commonly described using the background color followed by the color of the stripe; e.g., white-orange is a cable with a white background and an orange stripe.

The straight through and crossover patch cables are terminated with CAT 5 RJ-45 modular plugs. RJ-45 plugs are similar to those you'll see on the end of your telephone cable except they have eight versus four or six contacts on the end of the plug and they are about twice as big. Make sure they are rated for CAT 5 wiring. (RJ means "Registered Jack"). A special Modular Plug Crimping Tool (such as that shown in **Figure B-1**) is needed for proper wiring.

Figure B-1: Modular Plug Crimping Tool

The 10BASE-T and 100BASE-TX Ethernets consist of two transmission lines. Each transmission line is a pair of twisted wires. One pair receives data signals and the other pair transmits data signals. A balanced line driver or transmitter is at one end of one of these lines and a line receiver is at the other end. A simplified schematic for one of these lines and its transmitter and receiver is shown in **Figure B-2**.

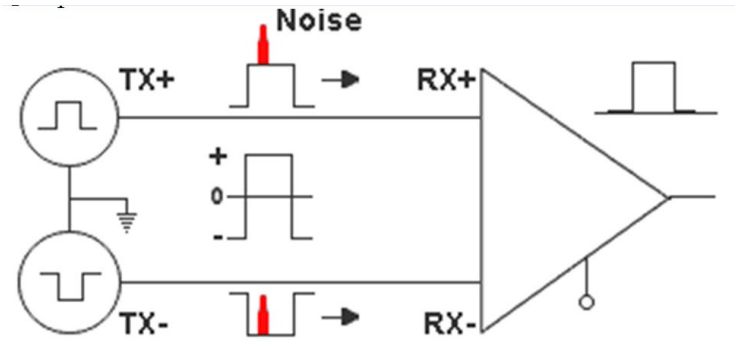

Figure B-2: Transmission Line

The main concern is the transient magnetic fields which surrounds the wires and the magnetic fields generated externally by the other transmission lines in the cable, other network cables, electric motors, fluorescent lights, telephone and electric lines, lightning, etc. This is known as noise. Magnetic fields induce their own pulses in a transmission line, which may literally bury the Ethernet pulses.

The twisted-pair Ethernet employs two principle means for combating noise. The first is the use of balanced transmitters and receivers. A signal pulse actually consists of two simultaneous pulses relative to ground: a negative pulse on one line and a positive pulse on the other. The receiver detects the total difference between these two pulses. Since a pulse of noise (shown in red in the diagram) usually produces pulses of the same polarity on both lines one pulse is essentially canceled by out the other at the receiver. In addition, the magnetic field surrounding one wire from a signal pulse is a mirror of the one on the other wire. At a very short distance from the two wires, the magnetic fields are opposite and have a tendency to cancel the effect of each other. This reduces the line's impact on the other pair of wires and the rest of the world.

The second and the primary means of reducing cross-talk between the pairs in the cable, is the double helix configuration produced by twisting the wires together. This configuration produces symmetrical (identical) noise signals in each wire. Ideally, their difference, as detected at the receiver, is zero. In actuality, it is much reduced.

Pin-out diagrams of the two types of UTP Ethernet cables are shown in **Figure B-3**.

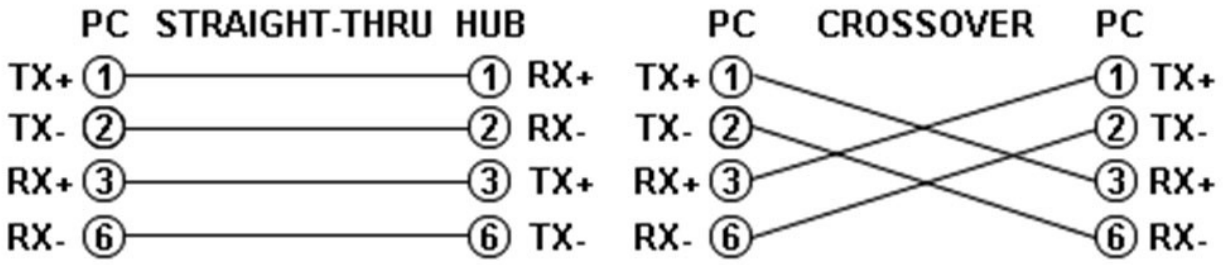

Figure B-3: Ethernet Cable Pin-Outs

Note that the TX (transmitter) pins are connected to corresponding RX (receiver) pins, plus to plus and minus to minus. Use a crossover cable to connect units with identical interfaces. If you use a straight-through cable, one of the two units must, in effect, perform the crossover function.

Two wire color-code standards apply: EIA/TIA 568A and EIA/TIA 568B. The codes are commonly depicted with RJ-45 jacks as shown in **Figure B-4**. If we apply the 568A color code and show all eight wires, our pin-out looks like **Figure B-5**.

Note that pins 4, 5, 7, and 8 and the blue and brown pairs are not used in either standard. Quite contrary to what you may read elsewhere, these pins and wires are not used or required to implement 100BASE-TX duplexing.

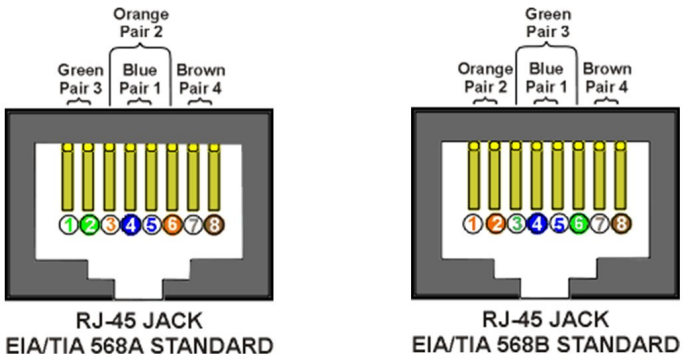

Figure B-4: Ethernet Wire Color Code Standards

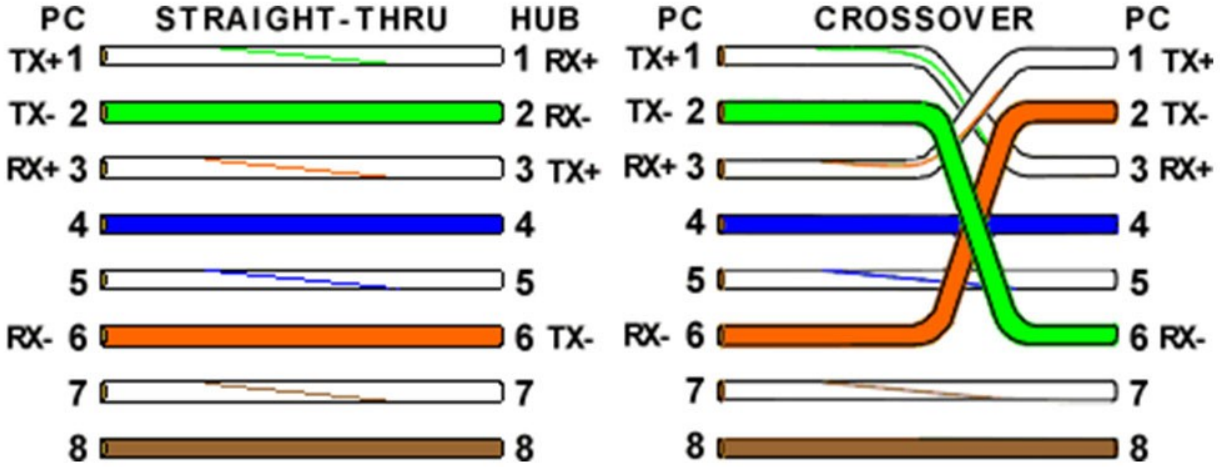

Figure B-5: Wiring Using 568A Color Codes

There are only two unique cable ends in the preceding diagrams, they correspond to the 568A and 568B RJ-45 jacks and are shown in **Figure B-6**.

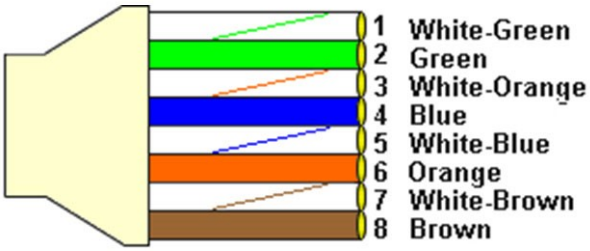

568A CABLE

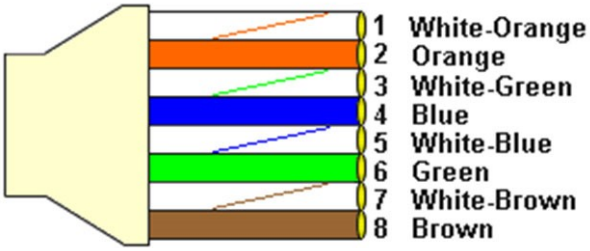

568B CABLE

Figure B-6: Wiring Using 568A and 568B Color Codes

Again, the wires with colored backgrounds may have white stripes and may be denoted that way in diagrams found elsewhere. For example, the green wire may be labeled Green-White. The background color is always specified first.

Now, all you need to remember, to properly configure the cables, are the diagrams for the two cable ends and the following rules:

- A straight-thru cable has identical ends.
- A crossover cable has different ends.

It makes no functional difference which standard you use for a straight-thru cable. You can start a crossover cable with either standard as long as the other end is the other standard. It makes no functional difference which end is which. 568A patch cable will work in a network with 568B wiring and 568B patch cable will work in a 568A network

Here are some essential cabling rules:

1. Try to avoid running cables parallel to power cables.
2. Do not bend cables to less than four times the diameter of the cable.
3. If you bundle a group of cables together with cable ties (zip ties), do not over -cinch them. It's okay to snug them together firmly; but don't tighten them so much that you deform the cables.
4. Keep cables away from devices which can introduce noise into them. Here's a short list: copy machines, electric heaters, speakers, printers, TV sets, fluorescent lights, copiers, welding machines, microwave ovens, telephones, fans, elevators, motors, electric ovens, dryers, washing machines, and shop equipment.
5. Avoid stretching UTP cables (tension when pulling cables should not exceed 25 LBS).
6. Do not run UTP cable outside of a building. It presents a very dangerous lightning hazard!
7. Do not use a stapler to secure UTP cables. Use telephone wire/RG-6 coaxial wire hangers, which are available at most hardware stores.

C.1 Adding a New RCP Unit to the Universal M&C

To add a new unit, choose "Action->Add Unit" from the Main Menu. Then choose "RCP2 Redundancy Controller". When a unit type is chosen a "New RCP2" dialog window will appear for the particular unit you are adding, as shown in **Figure C-1**.

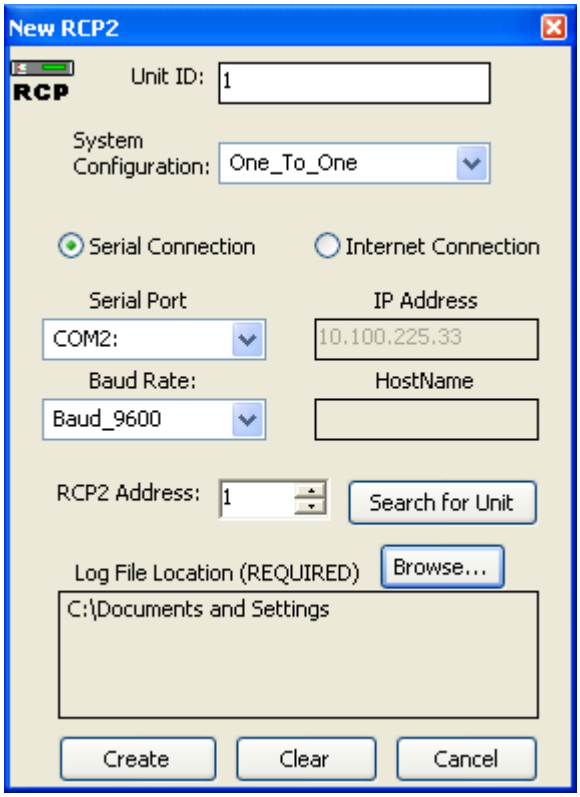

Figure C-1: New RCP2 Dialog Window

To add a RCP unit to the M&C Utility, fill in the appropriate boxes in the "New RCP2" dialog. A Unit ID is not required although it is recommended. If a Unit ID isn't entered the Unit ID will be assigned by the M&C. Select the system configuration (One_to_Two, One_to_One, Phase_Combined, or Dual_One_to_One).

To add a unit connected to a serial port you must supply a Port and a Baud Rate.

To add a unit connected via UDP (TCP/IP) you must supply either a Hostname or an IP Address

Specify the Unit's Unique Address in the RCP2 Address box. If you don't know the address of the unit you may search for it. Be aware that this search feature is only useful when you have only one unit connected to your PC at a time.

Choose a log file location by clicking the Browse... button. The default is the "My Documents" folder. The log file name will be the UnitID and the extension ".log" appended to it. i.e. "Unit1.log".

C.2 RCP2 overview for the Universal M&C

Each RCP in the M&C has four screens. The first screen is the “Status” window shown in **Figure C-2**. The status screen reflects the Online/Standby status of each amplifier in the system, and the switch position of each waveguide switch in the system. In addition, Internal and Device fault indicators are displayed. When there is no fault condition on a given unit, the indicator illuminates green. When a fault condition exists, the indicator illuminates red.

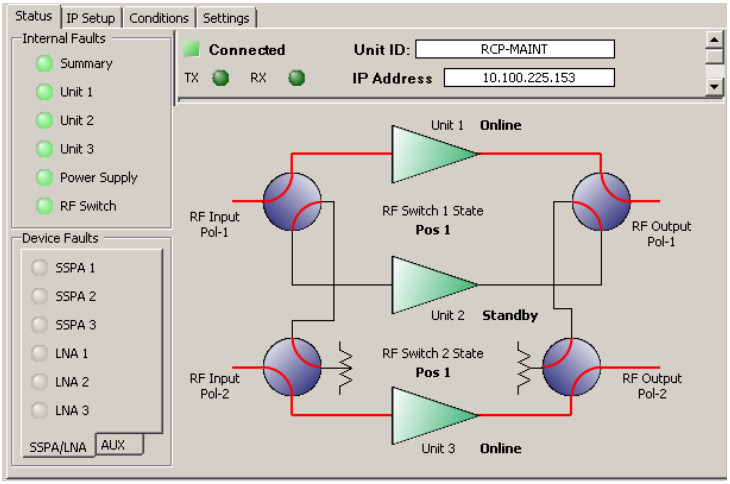

Figure C-2: Status Window

The second screen is the “IP Setup” window, shown in **Figure C-3**. It shows the user all of the TCP/IP settings on the RCP unit. When the IP Address is modified the RCP unit must be reset for it to use the new IP Address. Until the RCP unit is reset it will use the old IP Address. The Amplifier Local Port is the port that the RCP unit monitors for UDP requests. The RCP unit also answers requests using the same port.

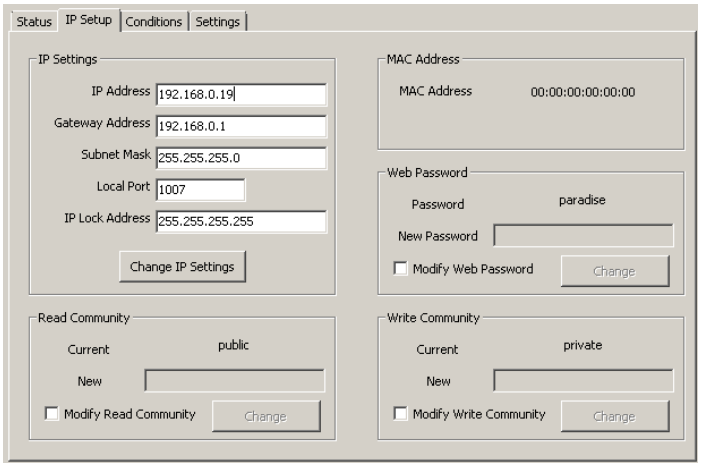

Figure C-3: IP Setup Window

If the Amplifier Local Port is changed the RCP unit must be reset. The Gateway Address and Subnet Mask are standard settings for TCPI/IP communications. If either of these settings is changed the RCP unit must be reset for the new settings to take effect. The IP Lock Address is used for security. If it is set to something besides 0.0.0.0 or 255.255.255.255 it will only answer the address it is set to. For example, if the IP Lock Address is 192.168.0.50 then a request from 192.168.0.100 will not be accepted. The IP Lock Address may be changed without resetting the RCP unit.

The third screen displays the Conditions of the units connected to the controller, as shown in **Figure C-4**. The system forward power, reflected power, power supply voltages and LNA/LNB currents and temperatures are all monitored. In addition, the calibration points of each LNA/LNB are displayed.

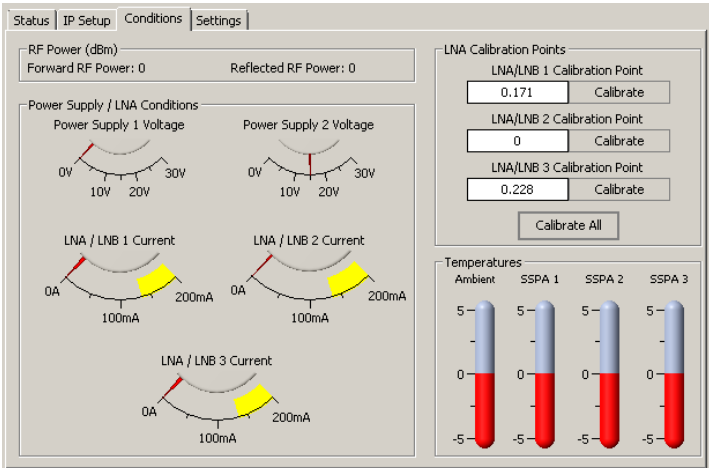

Figure C-4: Conditions Window

The fourth screen is the “Settings” screen, shown in **Figure C-5**. It shows the user all available settings on the RCP unit. All user-adjustable settings may be modified to suit the specific needs of the customer. However, it should be noted that the RCP units are pre-configured for the customer at the factory. If modification of any settings is necessary please refer to the **Table 7-6**.

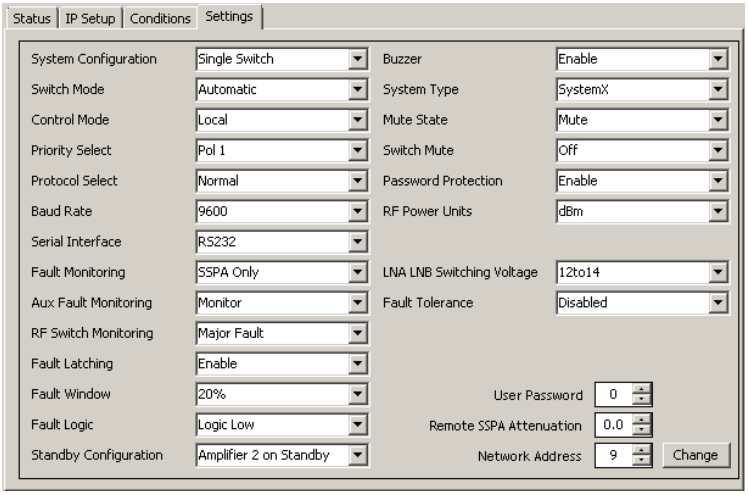

Figure C-5: Settings Window

THIS PAGE LEFT INTENTIONALLY BLANK

Table D-1: Firmware Revision History

Version	Feature description
1.20	Dual 1:1 mode introduced (RCPD-1100 controller).
2.00	Terminal mode added to protocol stack; Improved management for LNA/ LNB power supplies.
2.20	Support for remote control of SSPA system added. Remote group muting and attenuation control; Remote Forward RF Sensing.
3.1.1	Remote ambient temperature measurement introduced.
3.3.0	Switch muting option added for remote subsystem; External mute option introduced; Units temperature measurement added.
3.3.4	dBm to Watts conversion added. Reflected RF measurement introduced.
3.6.0	Extended Remote control capabilities for SSPA subsystem. Current and RF Units measurements added to the control array.
3.7.0 / 3.7.1	Fault tolerance introduced, display for LNA PS voltages added.
4.0.3	Ethernet interface introduced, Hardware platform switched to Digital Core version 2. Follow-the-Switch function introduced.
4.1.0	Hardware platform switched to I/O board version 1. Dual voltage for LNA/LNB PS introduced.
4.2.0	Support for Attenuation Offsets.
4.6.0	Ubicom command sync issue fixed. Improved serial drivers. Last release for DigiCore 4 platform
6.0.1	Migration to DigiCore 5 platform

THIS PAGE LEFT INTENTIONALLY BLANK

Appendix E: Documentation

The following pages consist of the Redundant System Controller specification sheet (document number 209352).

Specifications shown on the following pages are subject to change. The most recent revision of the specification sheet can be viewed on the Paradise Datacom web site: http://www.paradisedata.com.

THIS PAGE LEFT INTENTIONALLY BLANK